Instructions Sheet by Bollier Sylvain

Opgelet

Niet geschikt voor kinderen jonger dan 14 jaar.
Bevat kleine onderdelen.
Een toezichthoudende volwassene moet de instructies lezen, als een kind het model monteert.
Voor het samenstellen van deze set is gereedschap nodig.
Wees extra voorzichtig om letsel te voorkomen.

Précautions

Ce produit ne convient pas à un enfant de moins de 14 ans.
Contient de petites pièces.
La construction du modèle par un enfant doit s'effectuer sous la surveillance d'un adulte.
L'assemblage du modèle requiert des outils.
Utilisez-les avec précaution pour éviter toute blessure.

Caution

Not suitable for children under 14 years.
Contains small parts.
A supervising adult should read the instructions if a child assembles the model.
Assembling this kit need tools.
Extra care should be taken to avoid injury.

TAMIYA	N5 Colors	HUMBROL	Mr.Hobby Aqueous	
TS-8	C040	/	/	Gloss Red or RAL-3020 / Pantone 179C
TS-17	X010	/	/	Gloss Aluminium
TS-26	C041	/	/	Pure White
TS-4	C042	/	/	Flat Grey or RAL-FIAT605A / Pantone 11C
X-1	/	21	H2	Gloss Black
X-2	/	22	H1	Gloss White
X-5	/	3	H6	Green
X-7	/	19	H3	Gloss Red
X-8	/	69	H4	Lemon Yellow
X-11	/	11	H8	Silver
X-12	/	16	H9	Gold Leaf
X-18 (TS-29)	/	85	/	Semi Gloss Black
X-27	/	1321	H90	Clear Red
X-31	/	/	/	Titanium Gold
X-32	/	/	/	Titanium Silver
X-33	/	/	/	Bronze
XF-1 (TS-6)	X011	33	H12	Matt Black
XF-16	/	56	H8	Flat Aluminium
XF-19	/	64	H308	Sky Grey
XF-54	/	140	H317	Flat Dark Sea Grey
XF-56	/	56	/	Flat Metallic Grey
XF-59	/	93	H79	Desert Yellow
XF-85	/	/	/	Rubber Black

PREPARE BEFORE ASSEMBLY

- CUTTER
- NIPPER
- TWEEZERS
- DRILLS

- PLASTIC CEMENT
- CEMENT
- DECAL SOFTENER

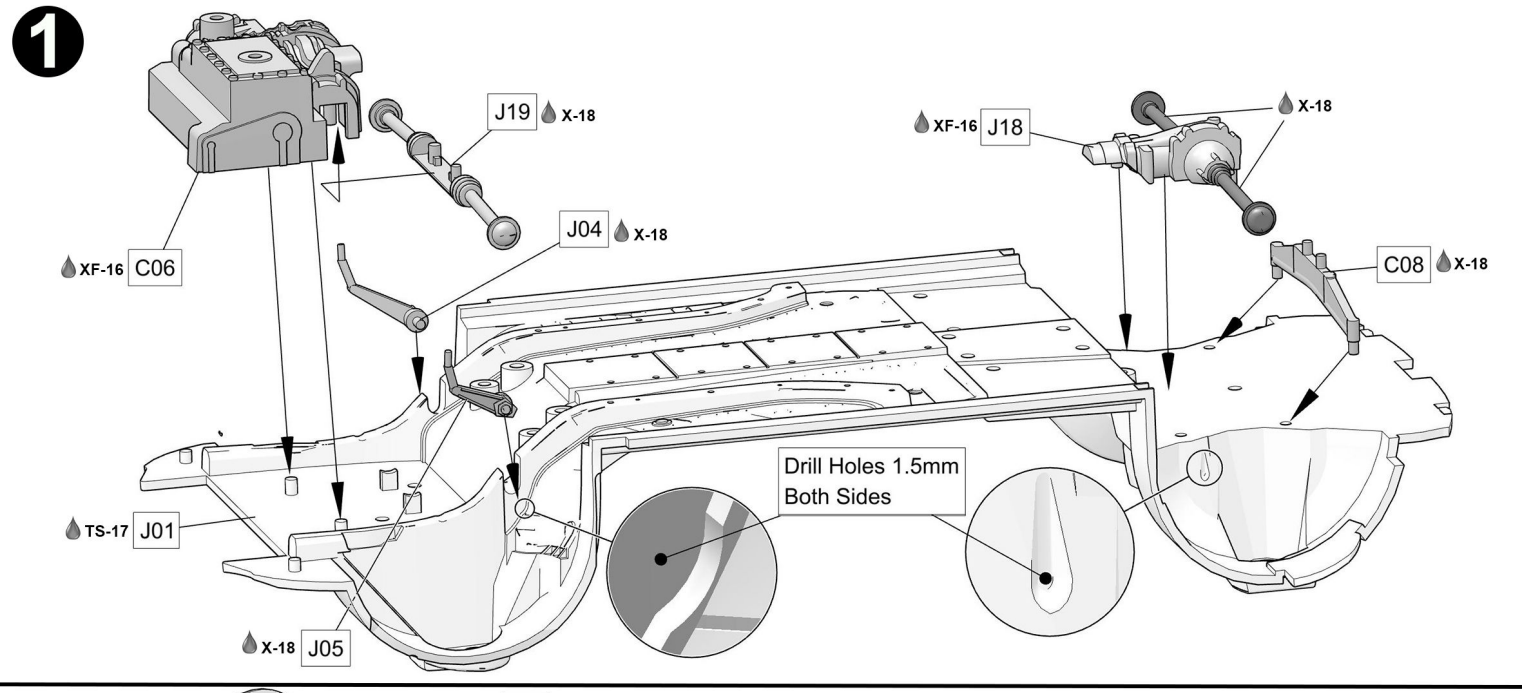
1
J19 X-18
XF-16 J18
X-18
J04 X-18
XF-16 C06
C08 X-18
Drill Holes 1.5mm
Both Sides
TS-17 J01
X-18 J05

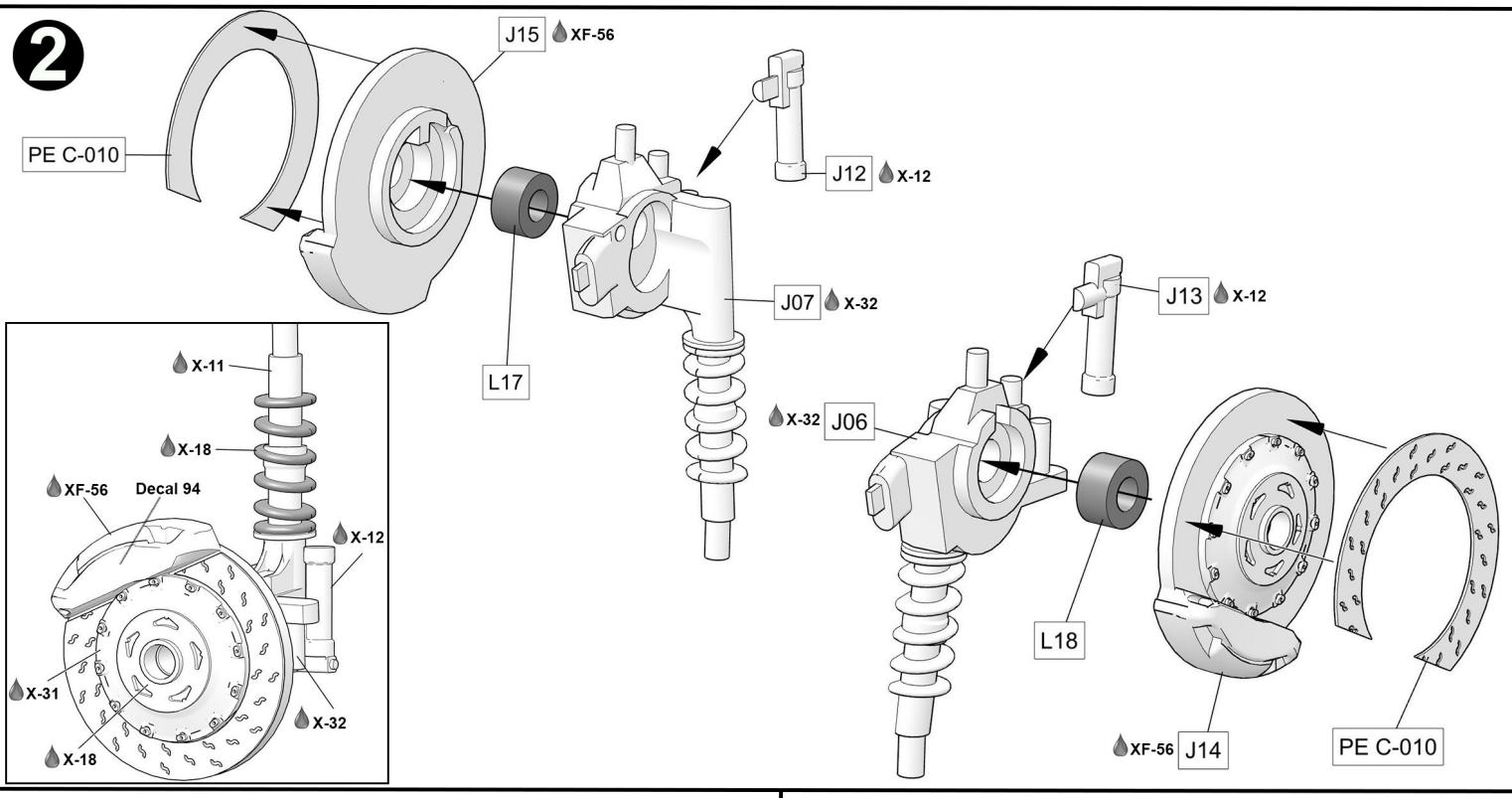
2
J15 XF-56
PE C-010
J12 X-12
J07 X-32
L17
J13 X-12
X-32 J06
L18
XF-56 J14
PE C-010
X-11
X-18
XF-56
Decal 94
X-12
X-31
X-32
X-18

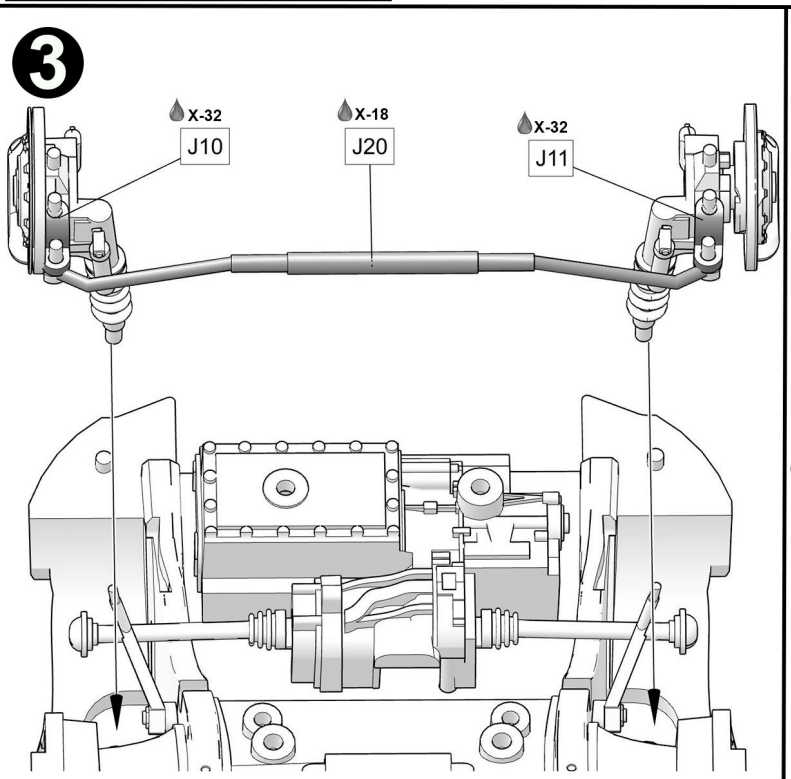
3
X-32
J10
X-18
J20
X-32
J11

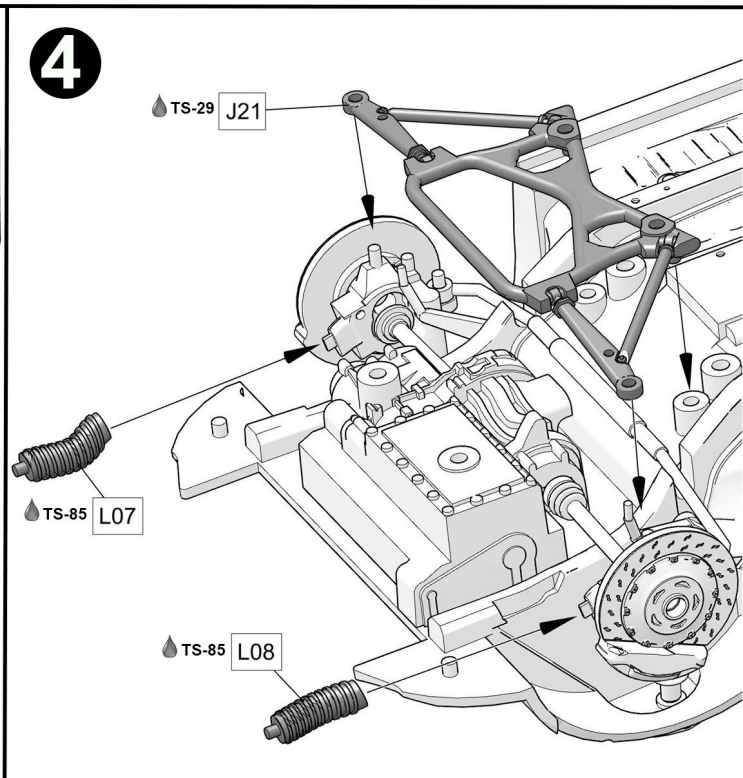
4
TS-29 J21
TS-85 L07
TS-85 L08

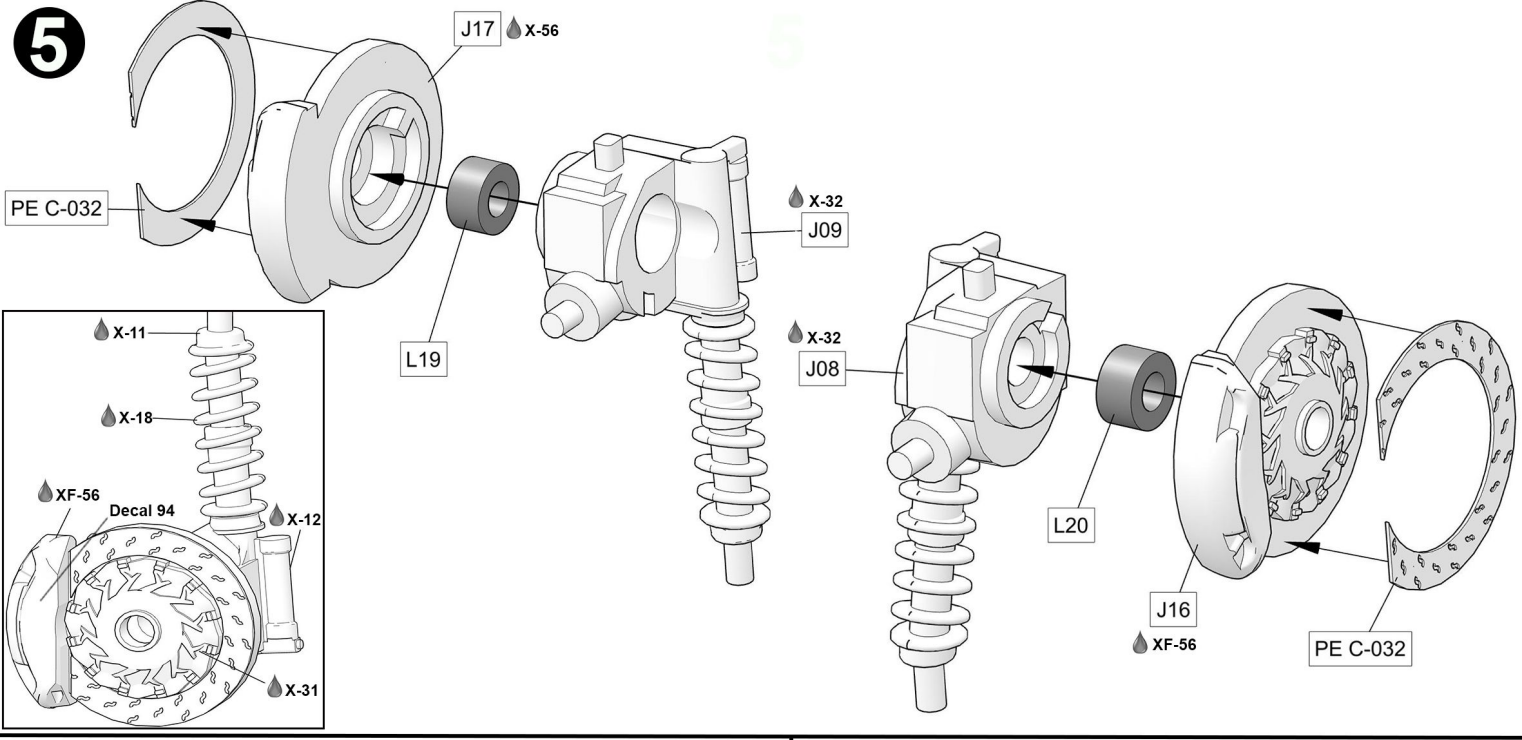
5
J17
X-56
PE C-032
X-32
J09
L19
X-11
X-18
XF-56
Decal 94
X-12
X-31
X-32
J08
L20
J16
XF-56
PE C-032

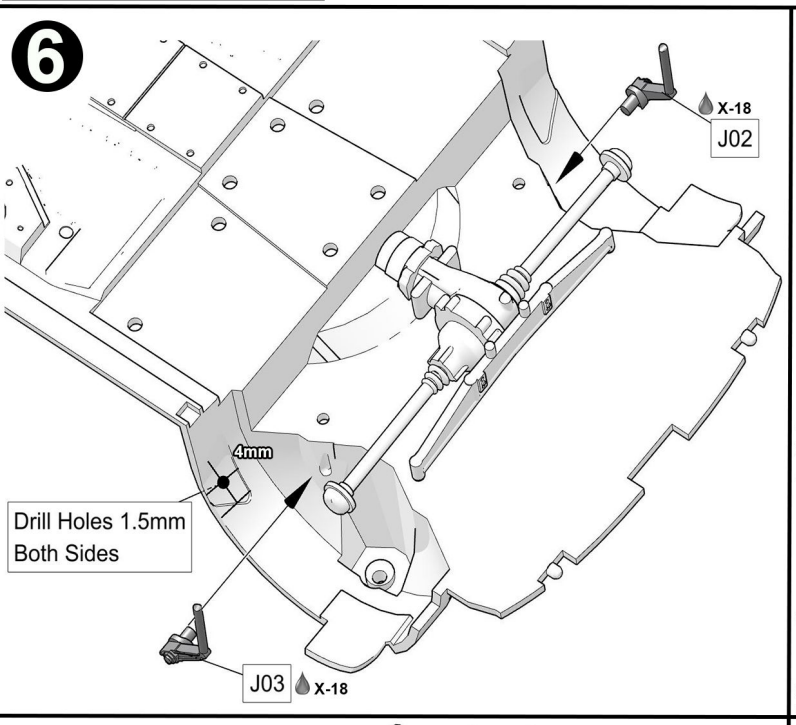
6
X-18
J02
4mm
Drill Holes 1.5mm
Both Sides
J03
X-18

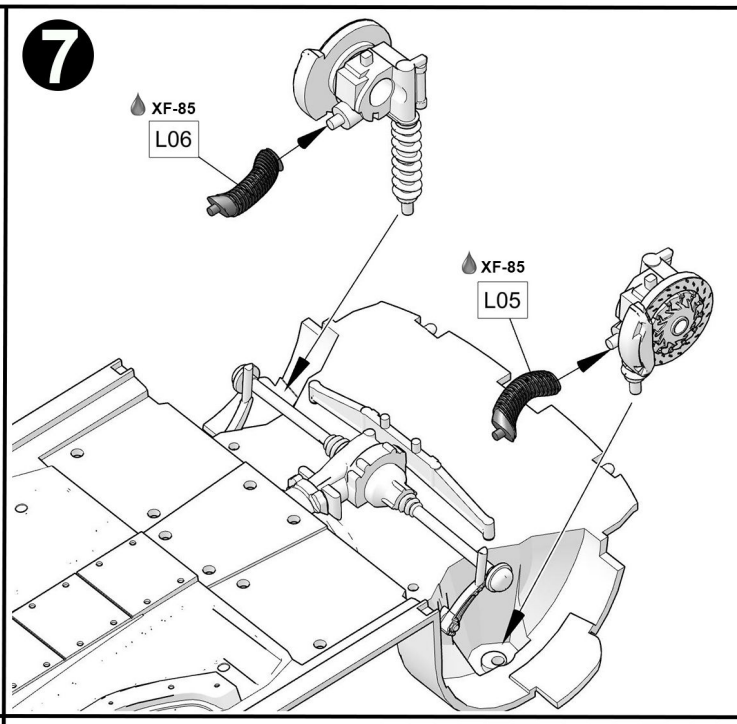
7
XF-85
L06
XF-85
L05

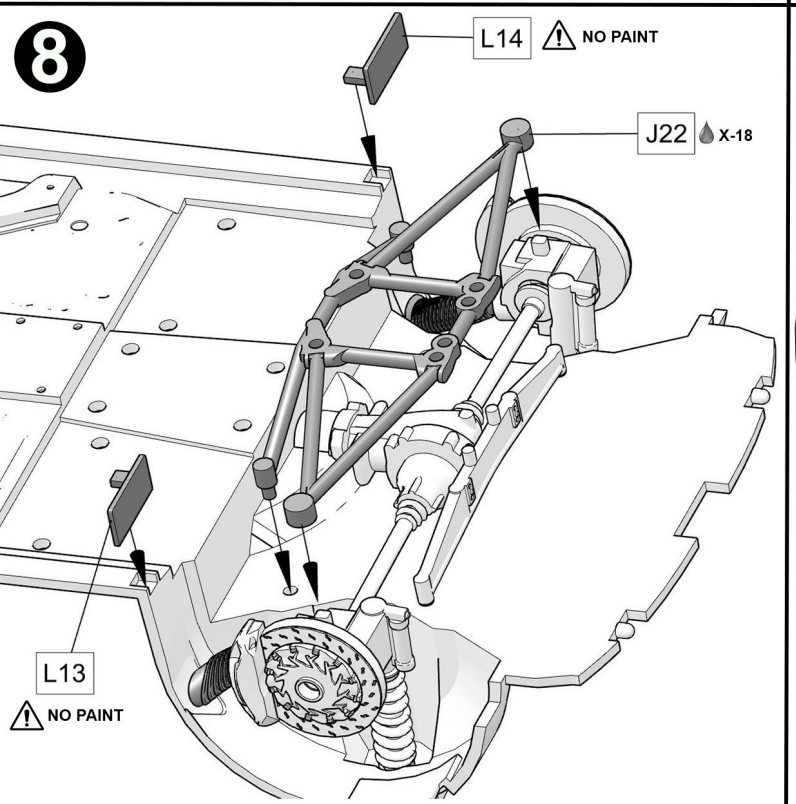
8
L14
NO PAINT
J22
X-18
L13
NO PAINT

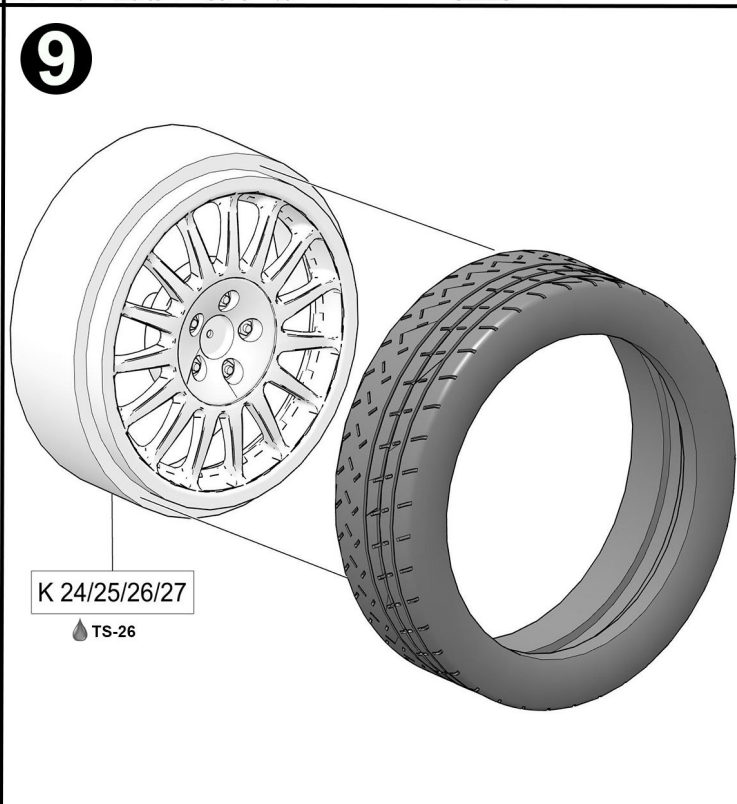
9
K 24/25/26/27
TS-26

10

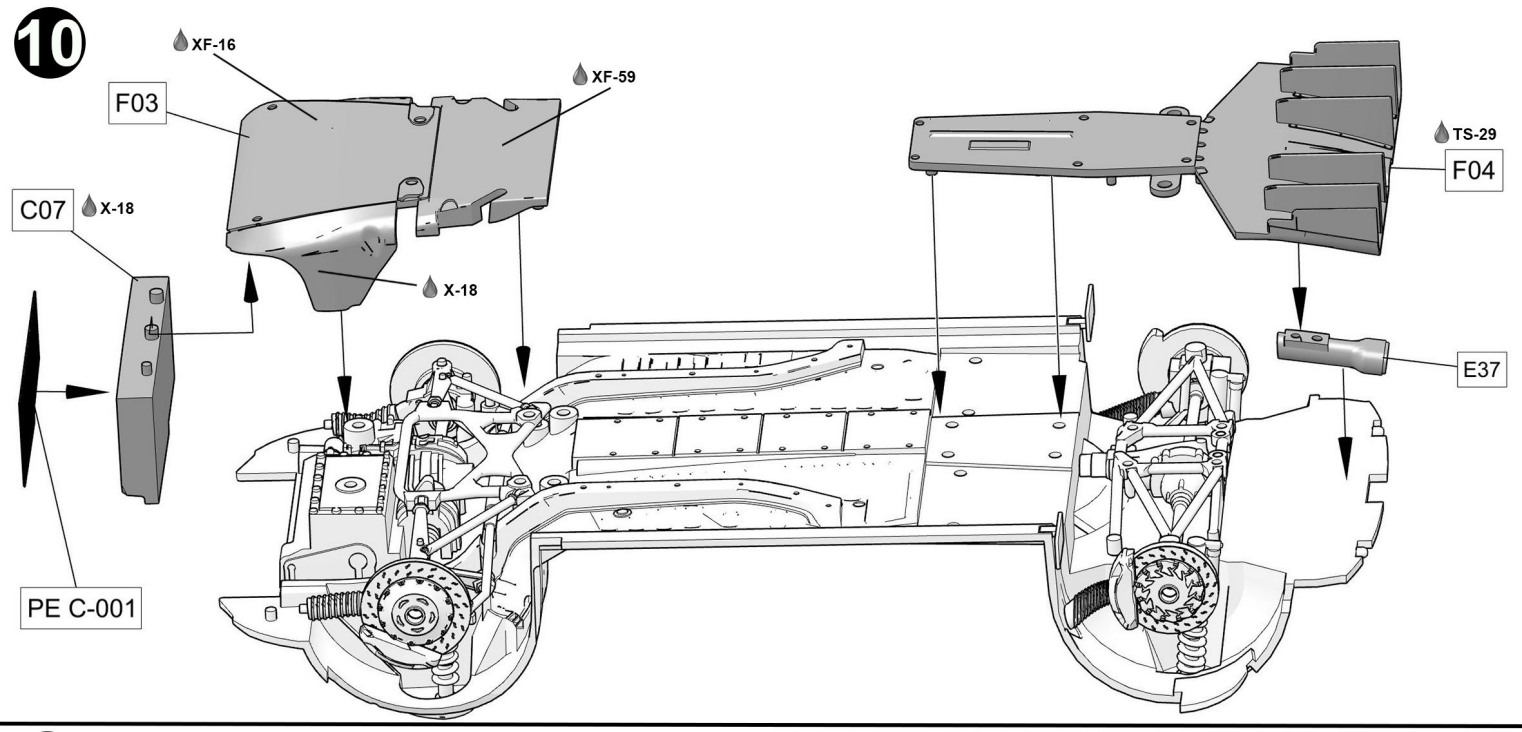
XF-16
F03
XF-59
TS-29
F04
C07
X-18
X-18
E37
PE C-001

11

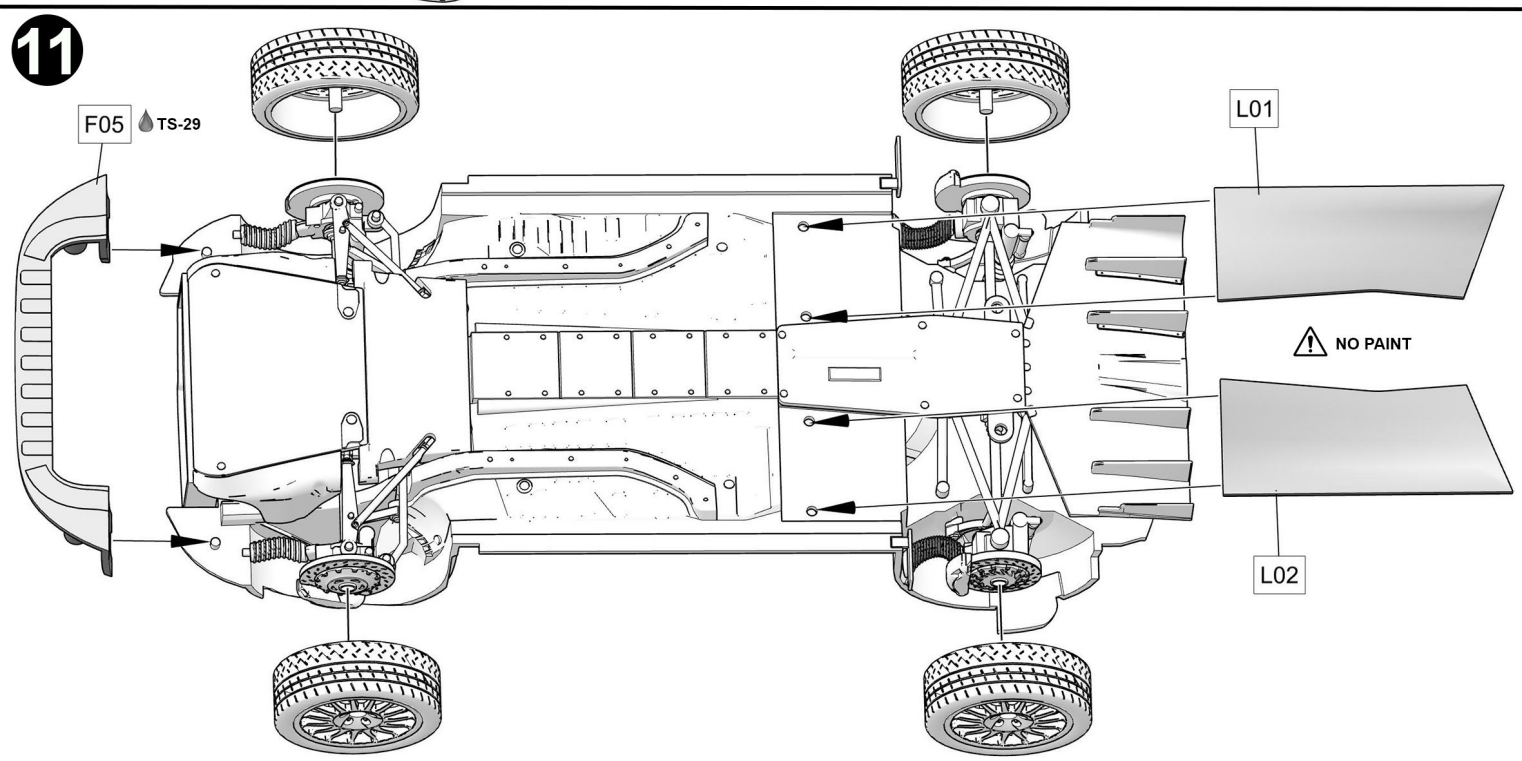
F05
TS-29
L01
NO PAINT
L02

12

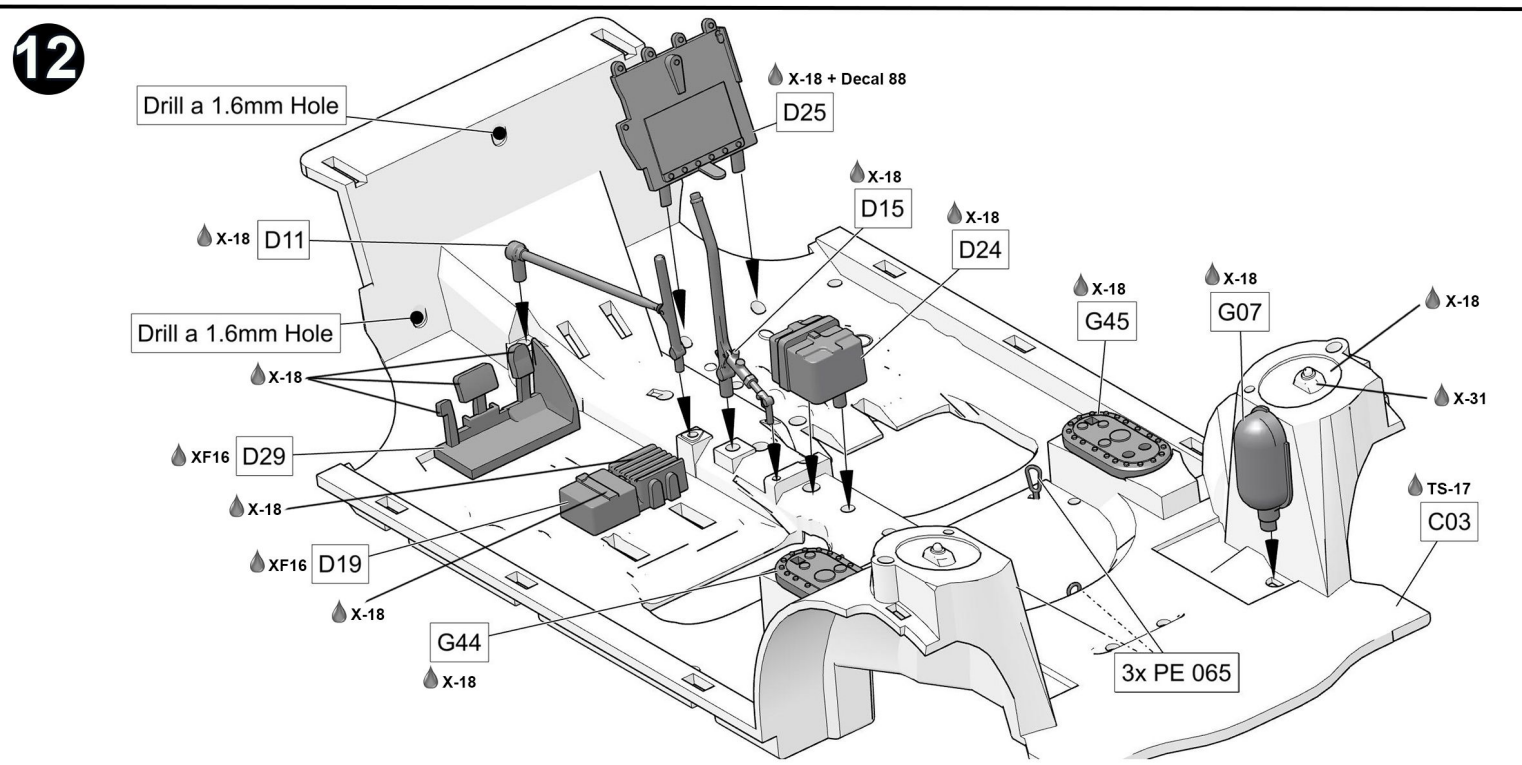
Drill a 1.6mm Hole
X-18 + Decal 88
D25
X-18
D15
X-18
D24
X-18
D11
X-18
G45
X-18
G07
X-18
Drill a 1.6mm Hole
X-18
X-31
XF16
D29
X-18
TS-17
C03
XF16
D19
X-18
G44
X-18
3x PE 065

13

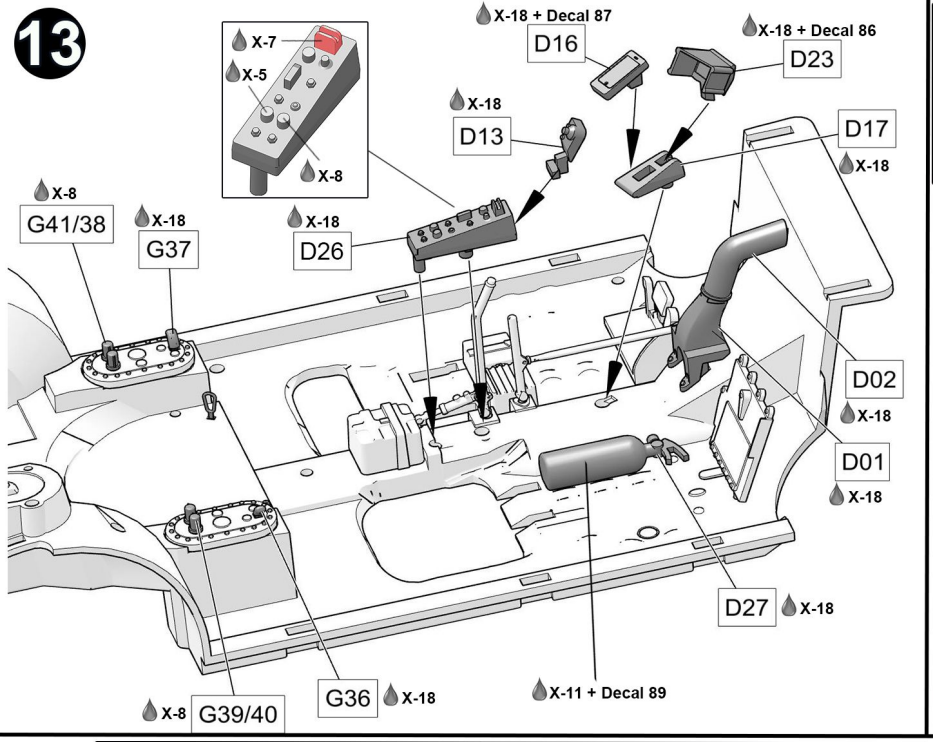

Seats Step X2

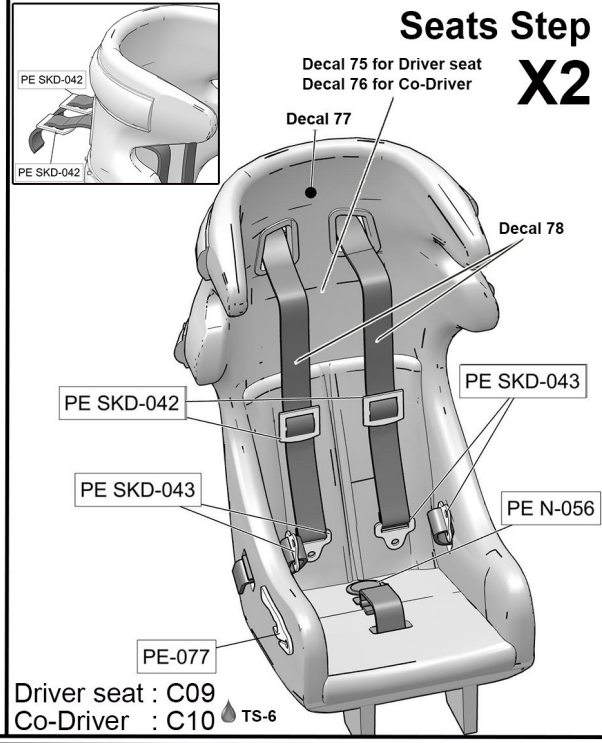

14

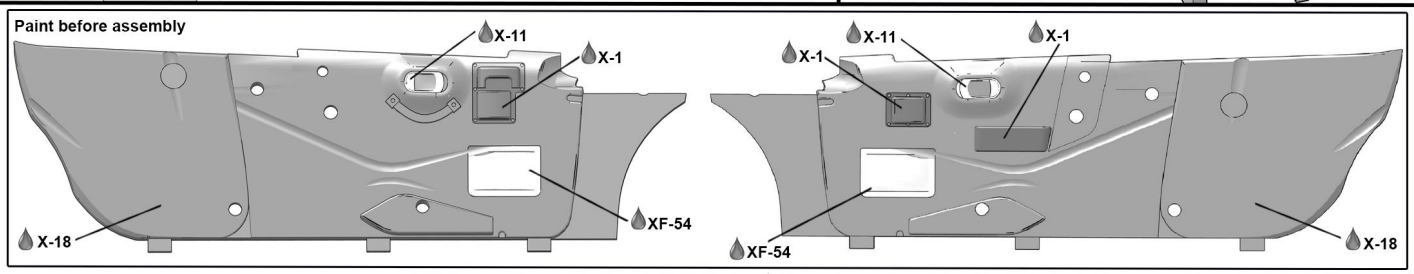

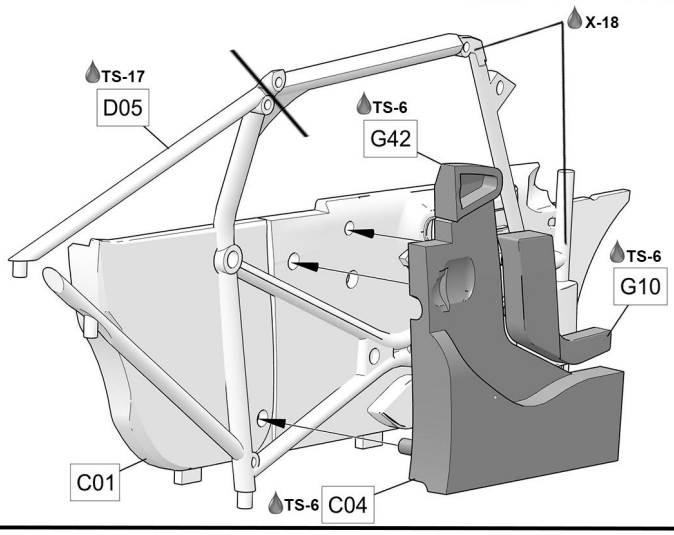

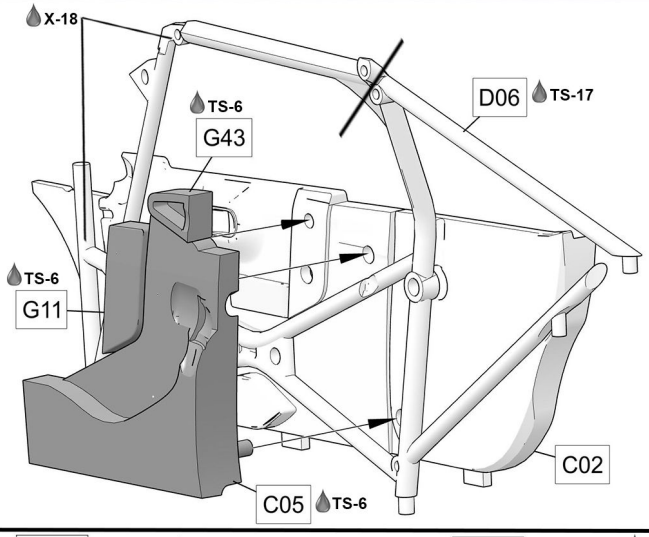

15

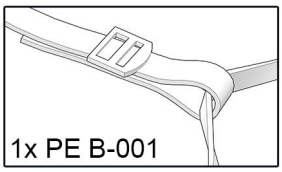

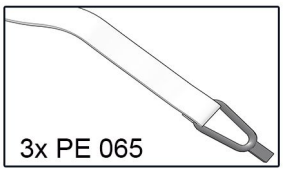

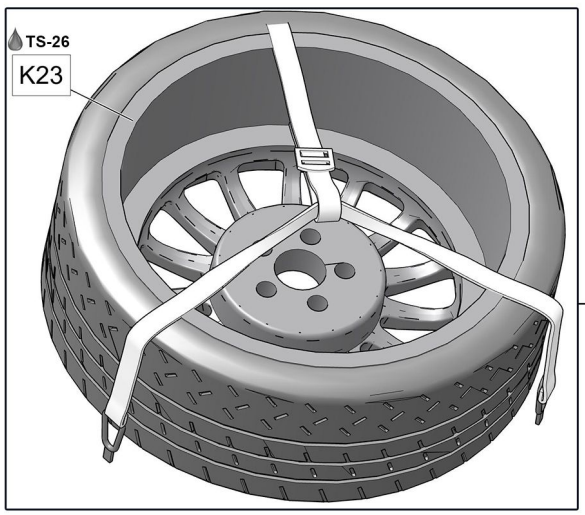

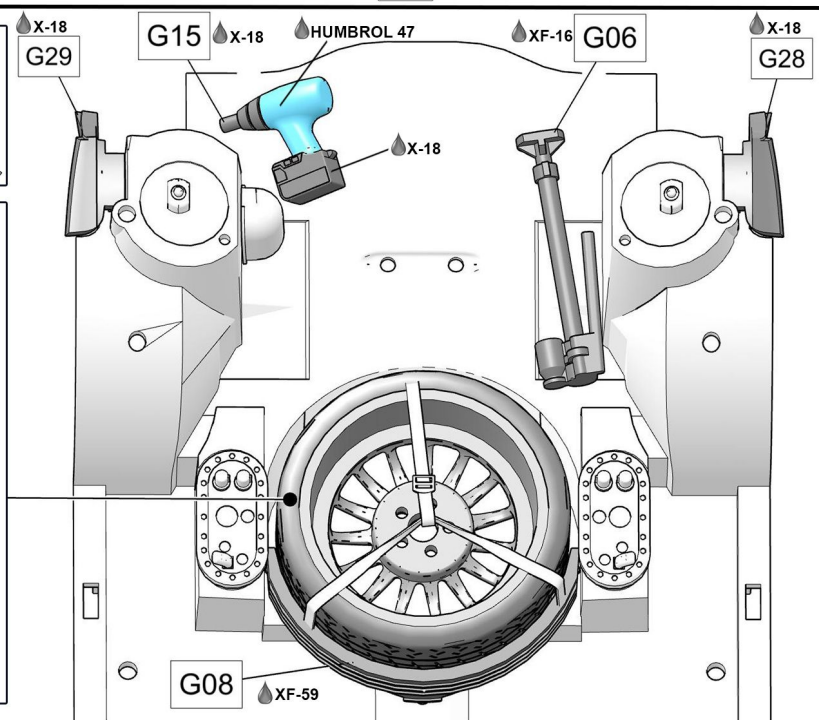

16

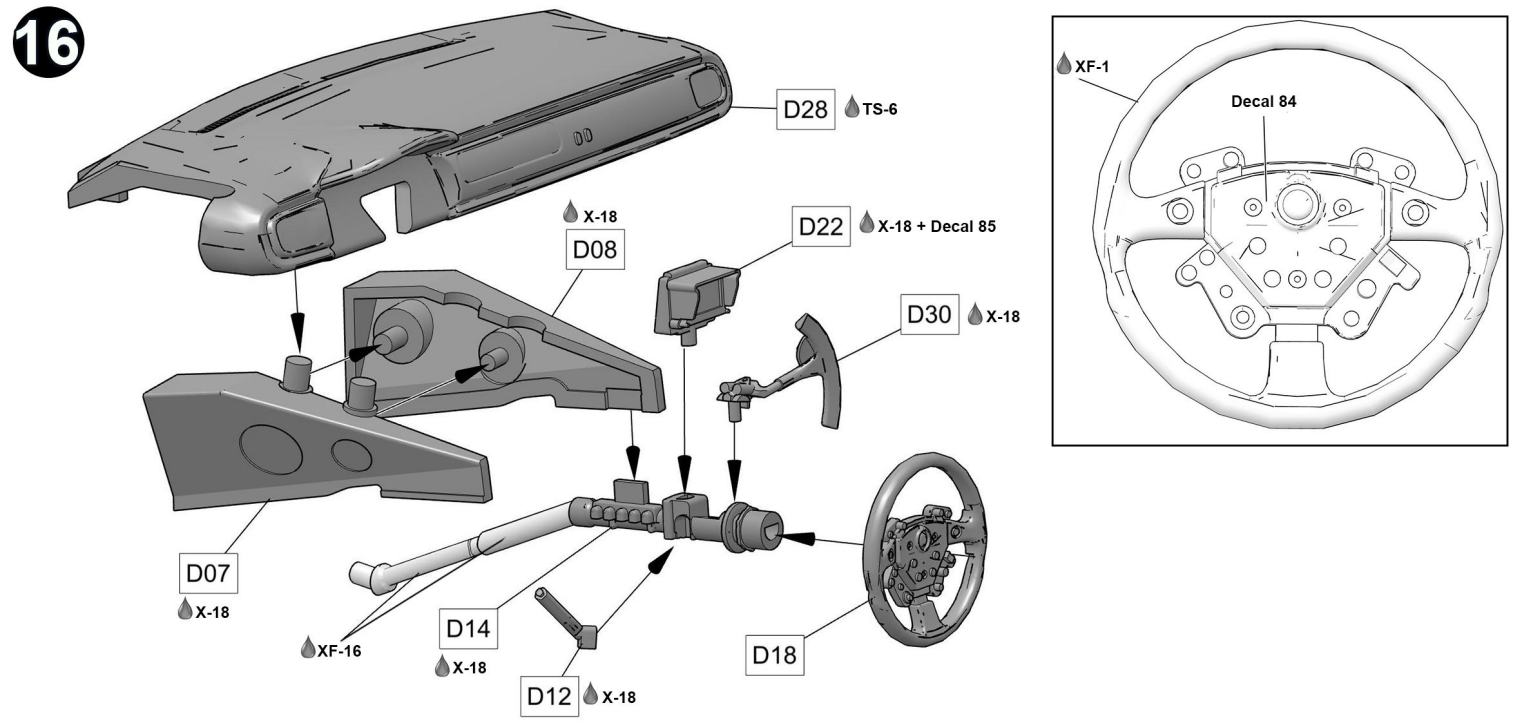
D28
TS-6
X-18
D08
D22
X-18 + Decal 85
D30
X-18
D07
X-18
XF-16
D14
X-18
D12
X-18
D18
XF-1
Decal 84

17

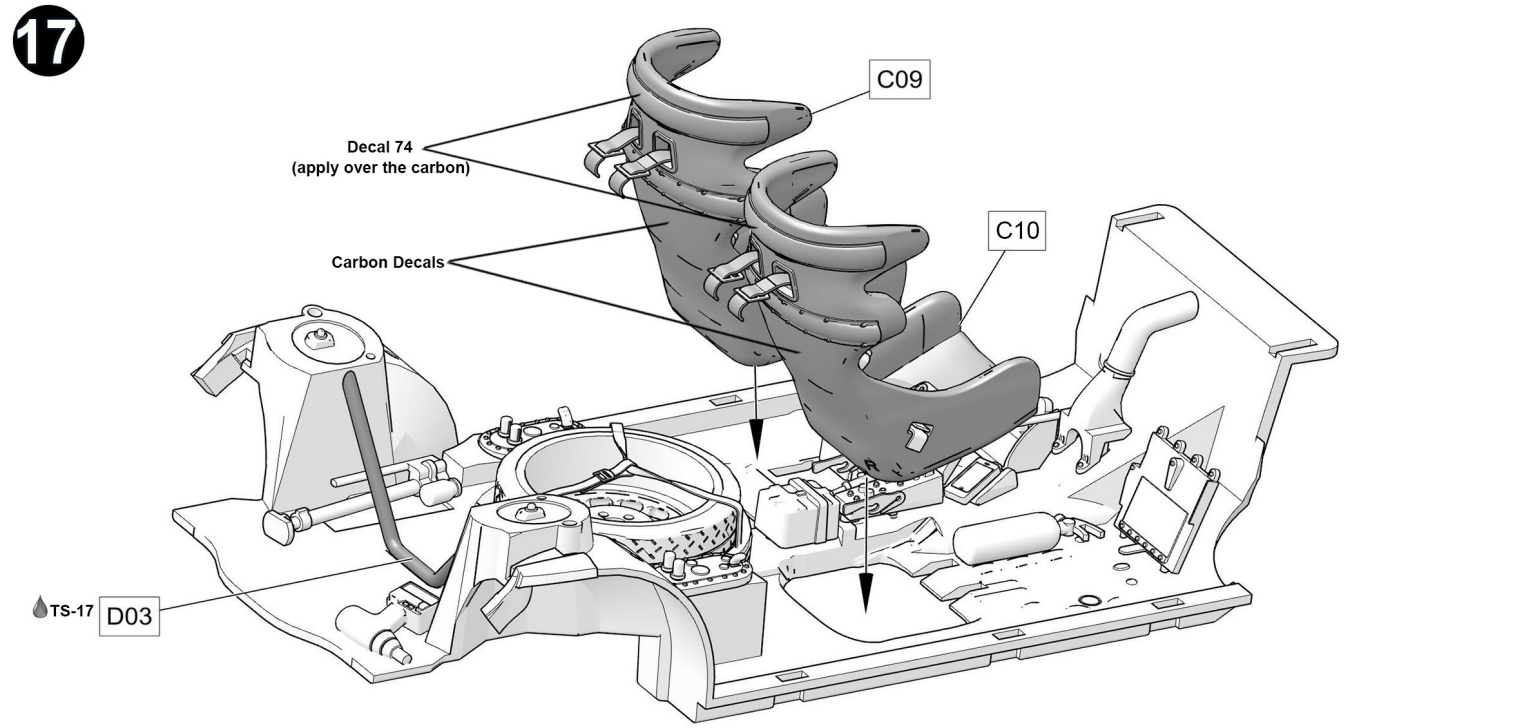
C09
Decal 74
(apply over the carbon)
Carbon Decals
C10
TS-17
D03

18

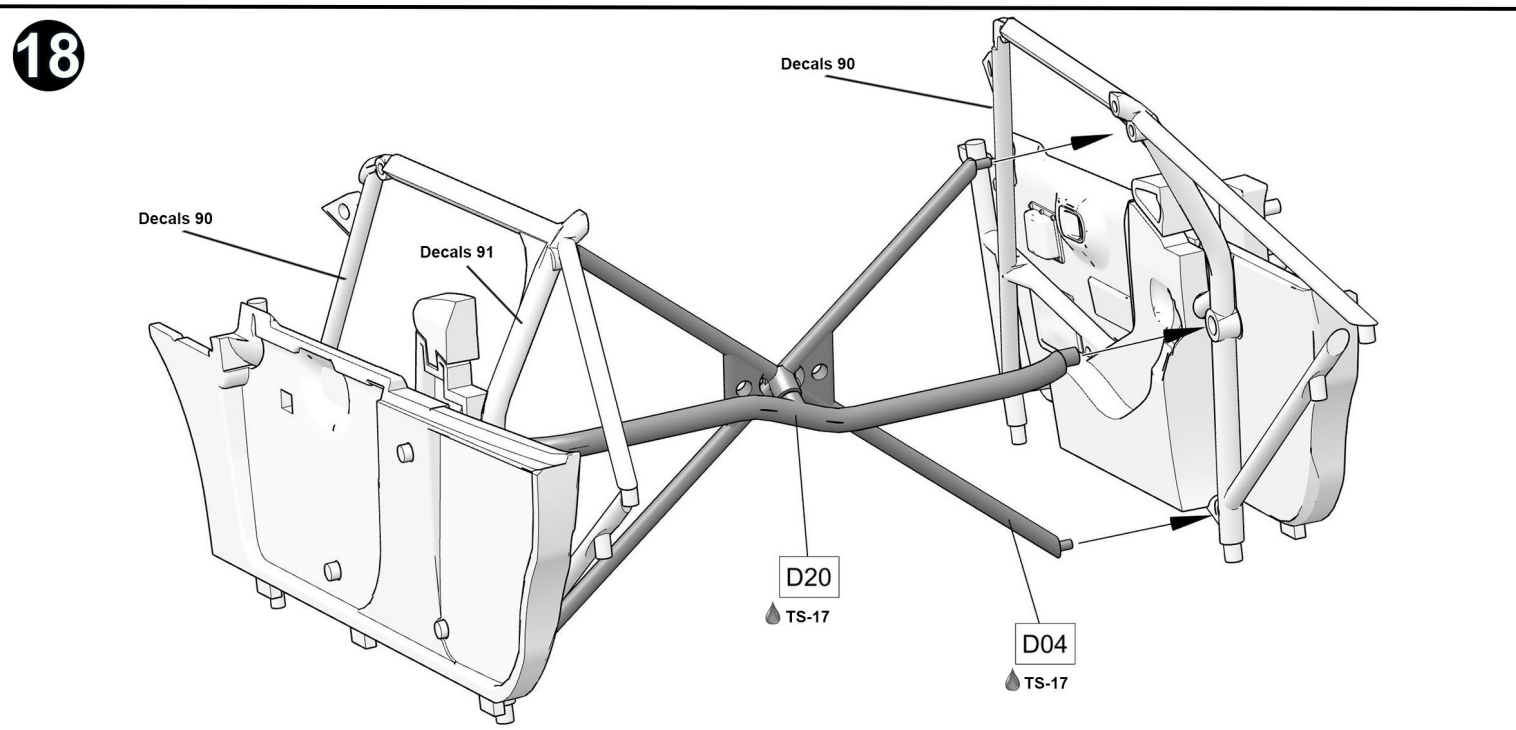
Decals 90
Decals 90
Decals 91
D20
TS-17
D04
TS-17

19

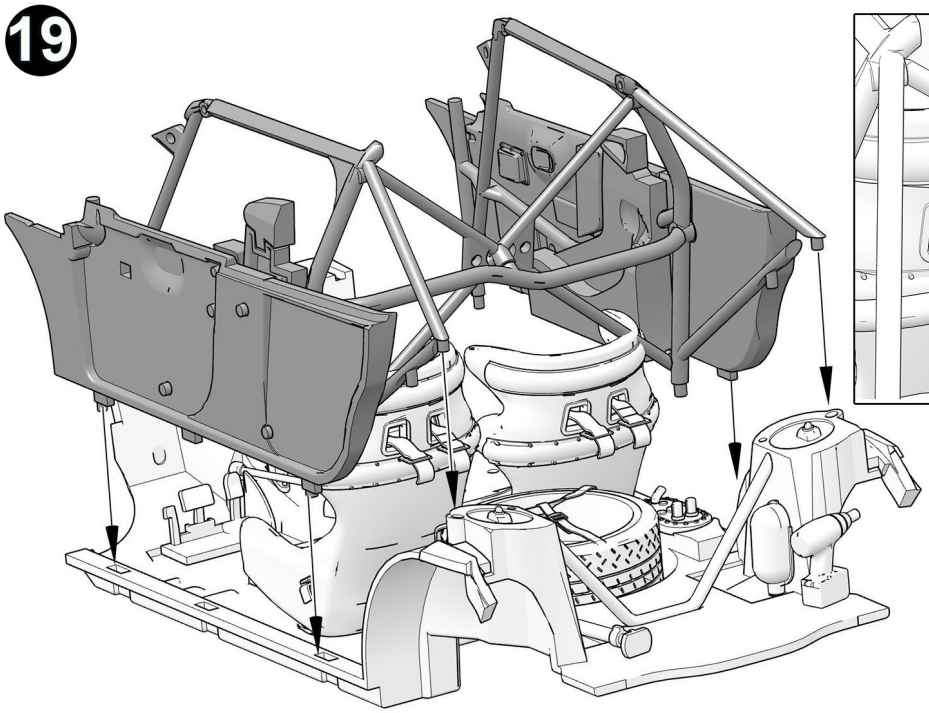

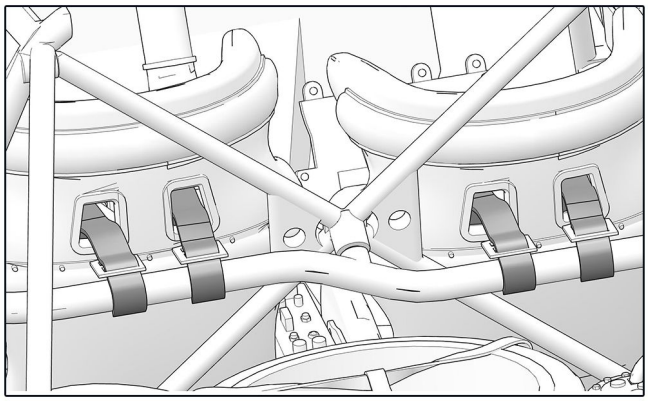

⚠ **Fix the harnesses to the bar**

20

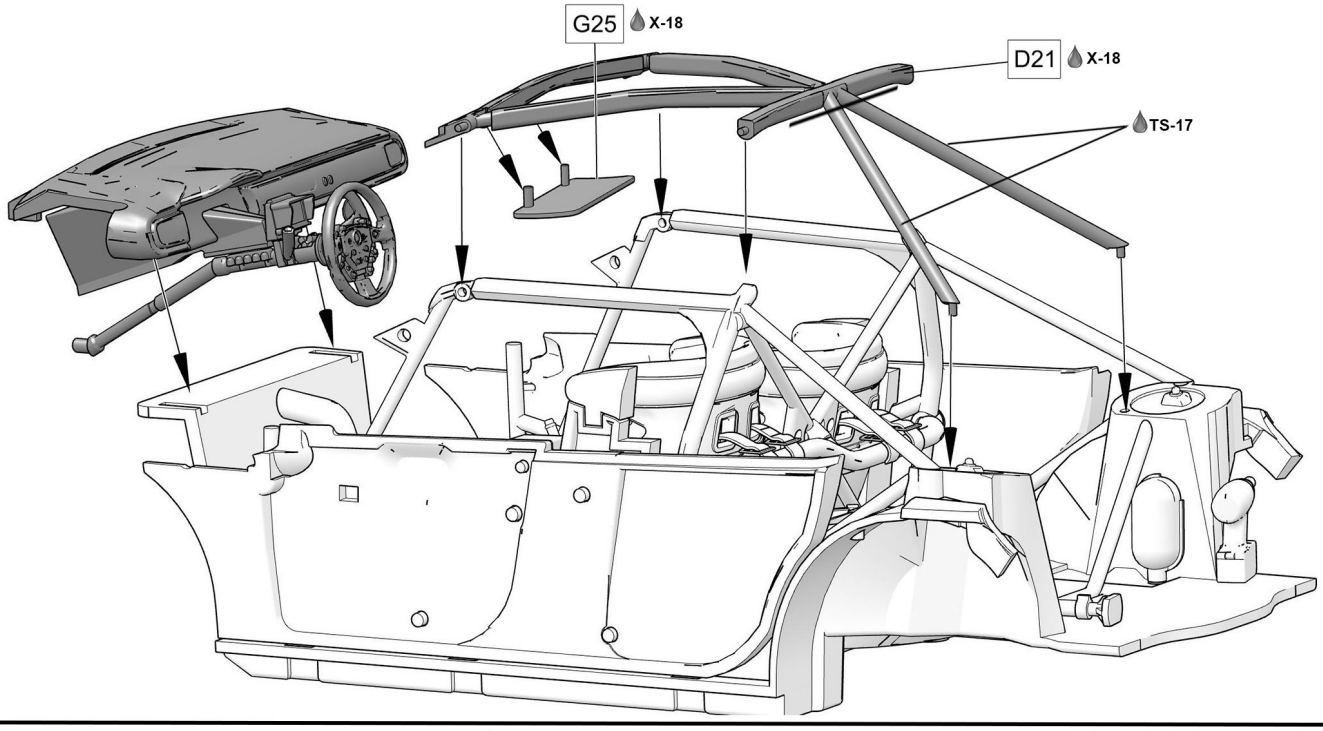

21

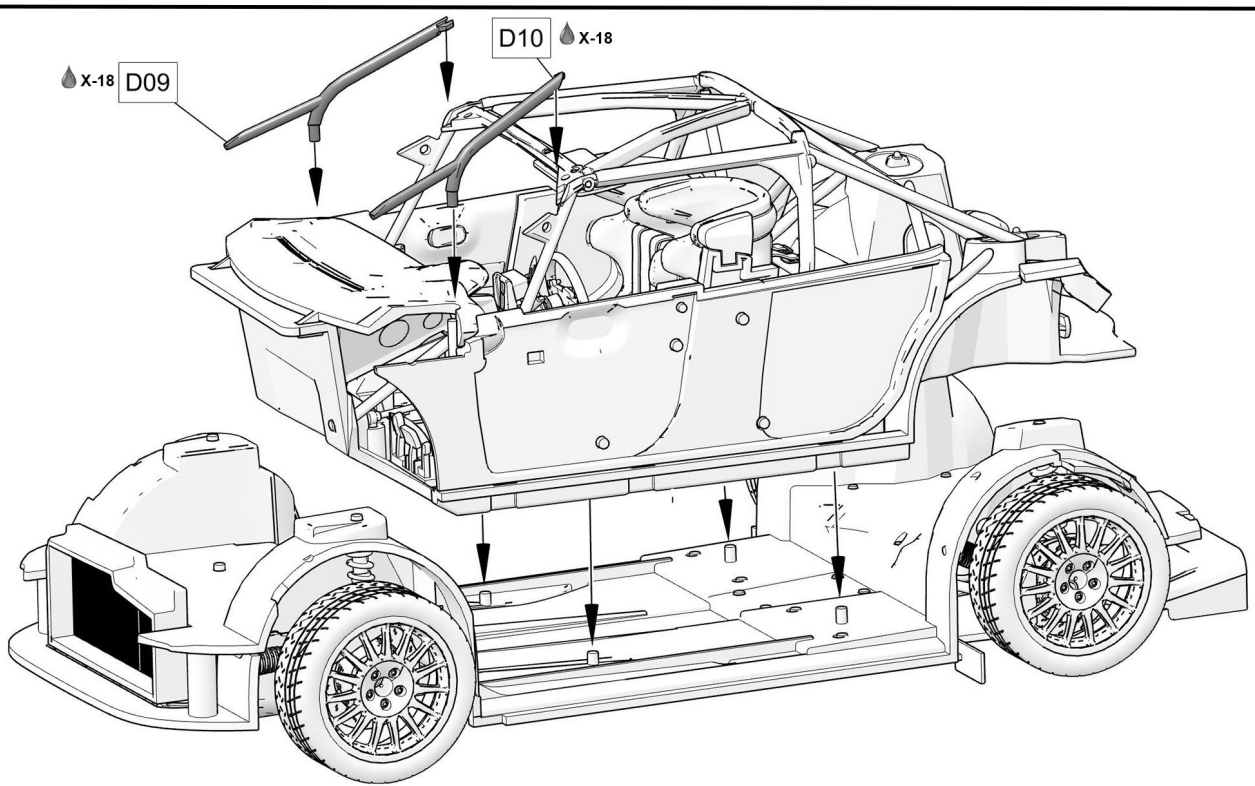

22

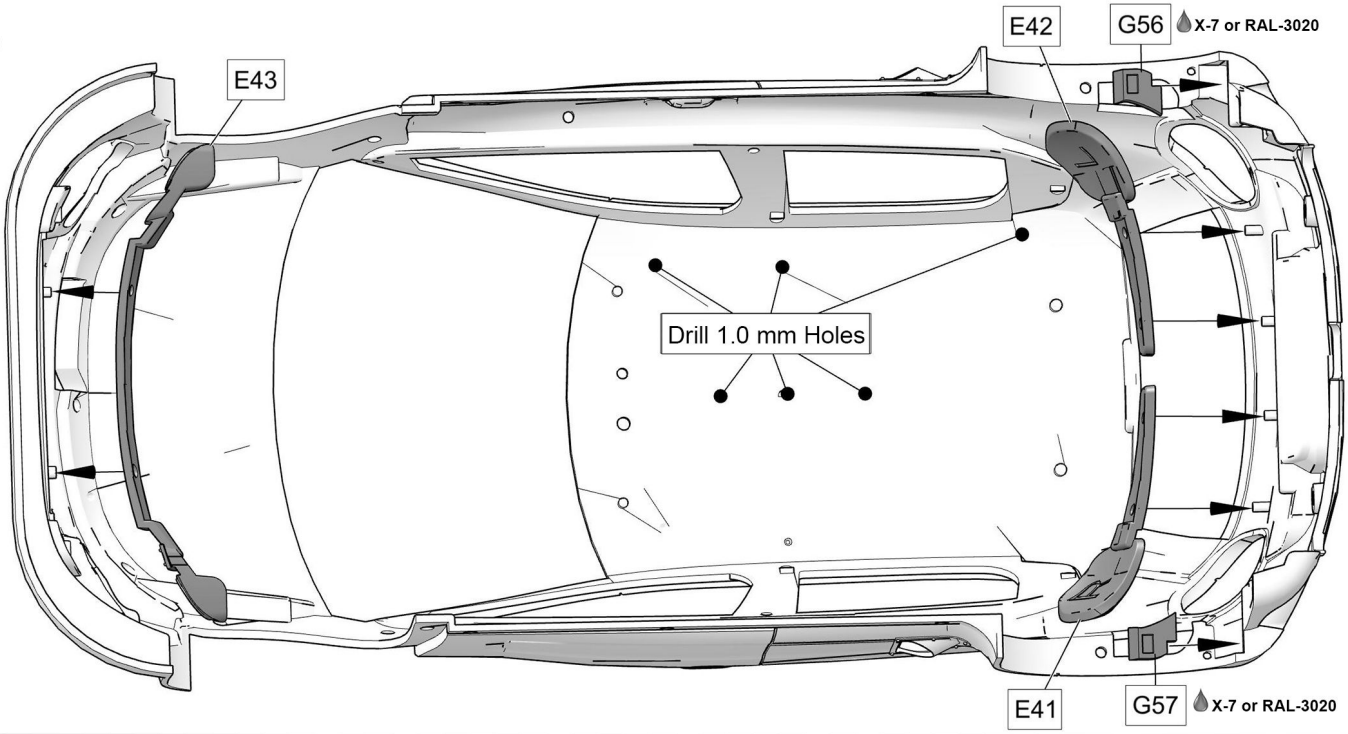
E42
G56
X-7 or RAL-3020
E43
Drill 1.0 mm Holes
E41
G57
X-7 or RAL-3020

23

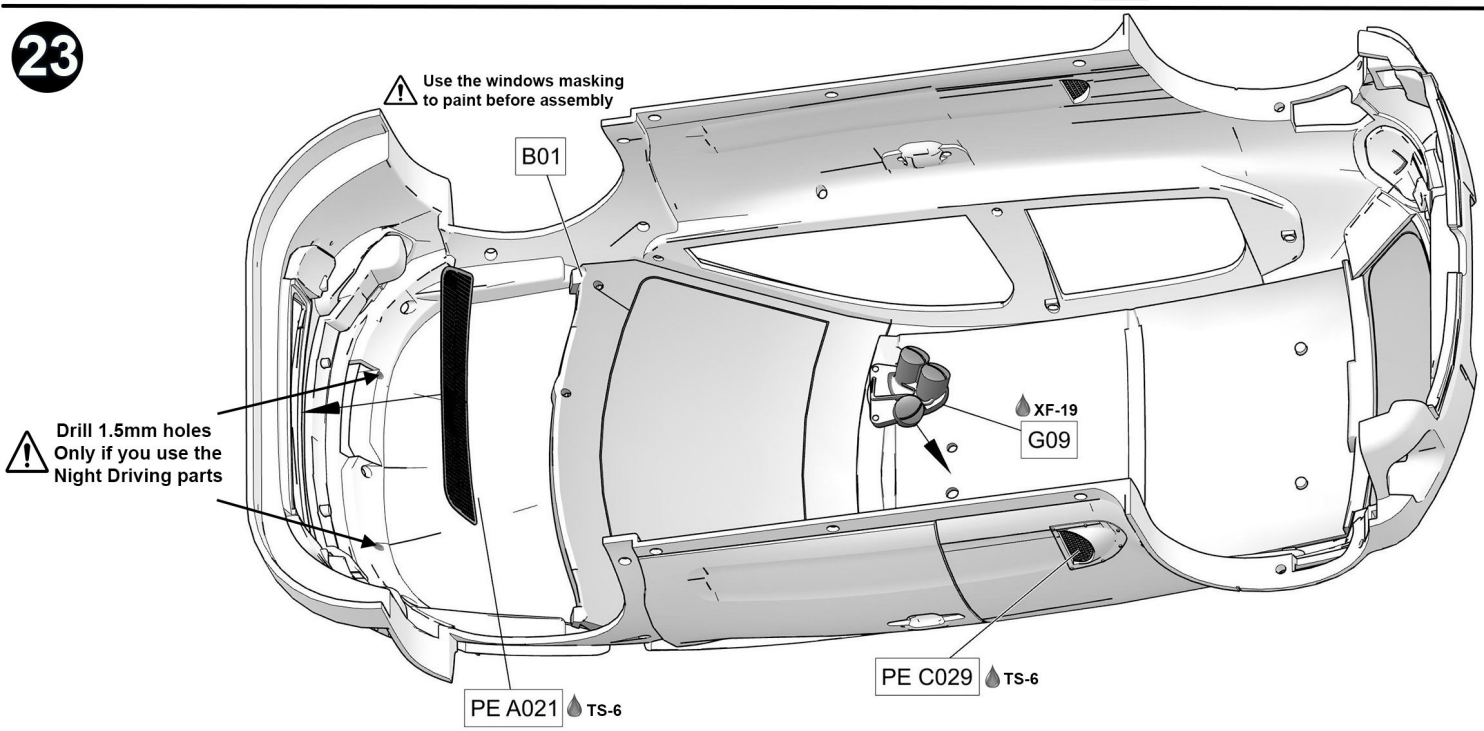
Use the windows masking to paint before assembly
B01
Drill 1.5mm holes Only if you use the Night Driving parts
XF-19
G09
PE C029
TS-6
PE A021
TS-6

24

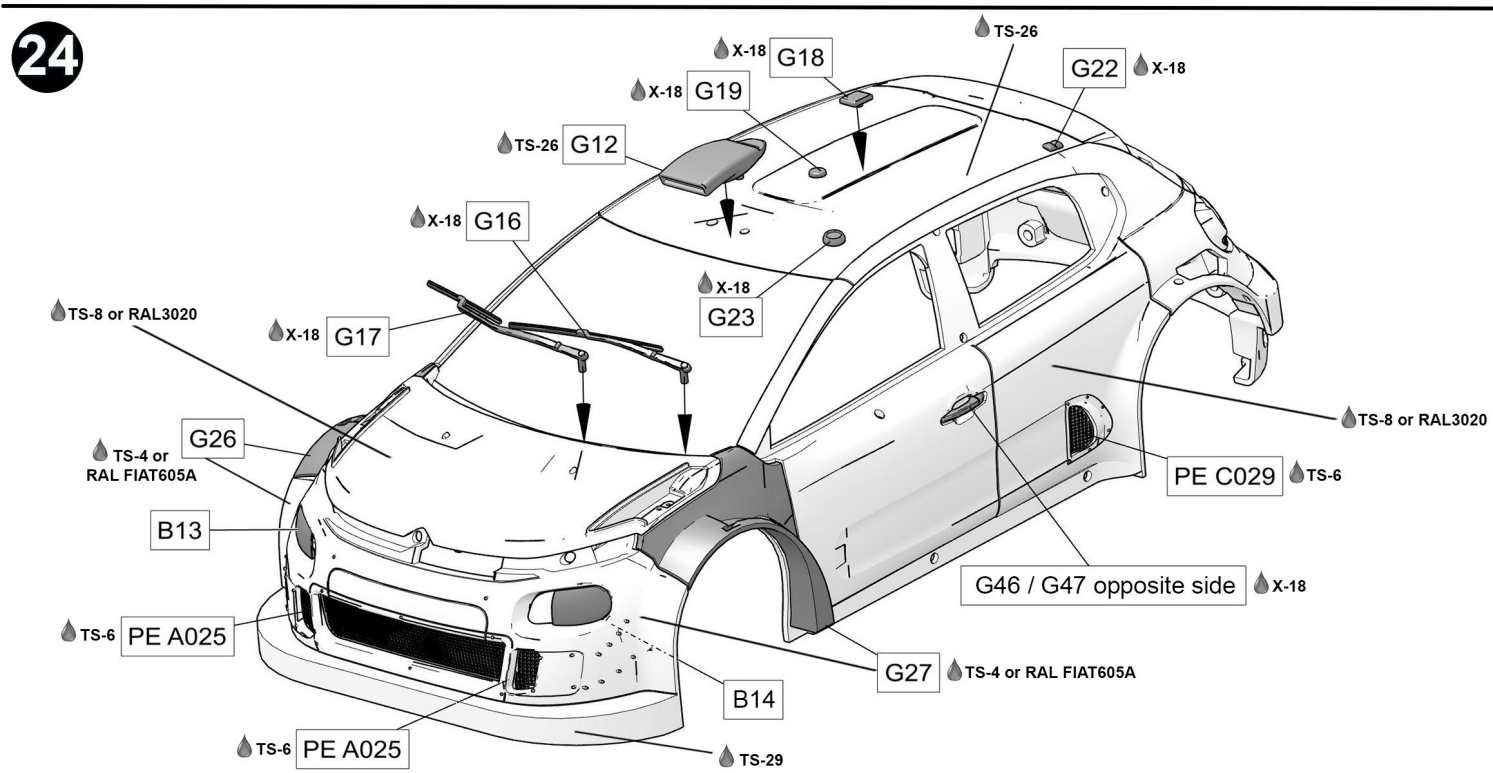
TS-26
X-18
G18
G22
X-18
X-18
G19
TS-26
G12
X-18
G16
X-18
G23
TS-8 or RAL3020
X-18
G17
TS-8 or RAL3020
G26
TS-4 or RAL FIAT605A
PE C029
TS-6
B13
G46 / G47 opposite side
X-18
TS-6
PE A025
G27
TS-4 or RAL FIAT605A
B14
TS-6
PE A025
TS-29

25

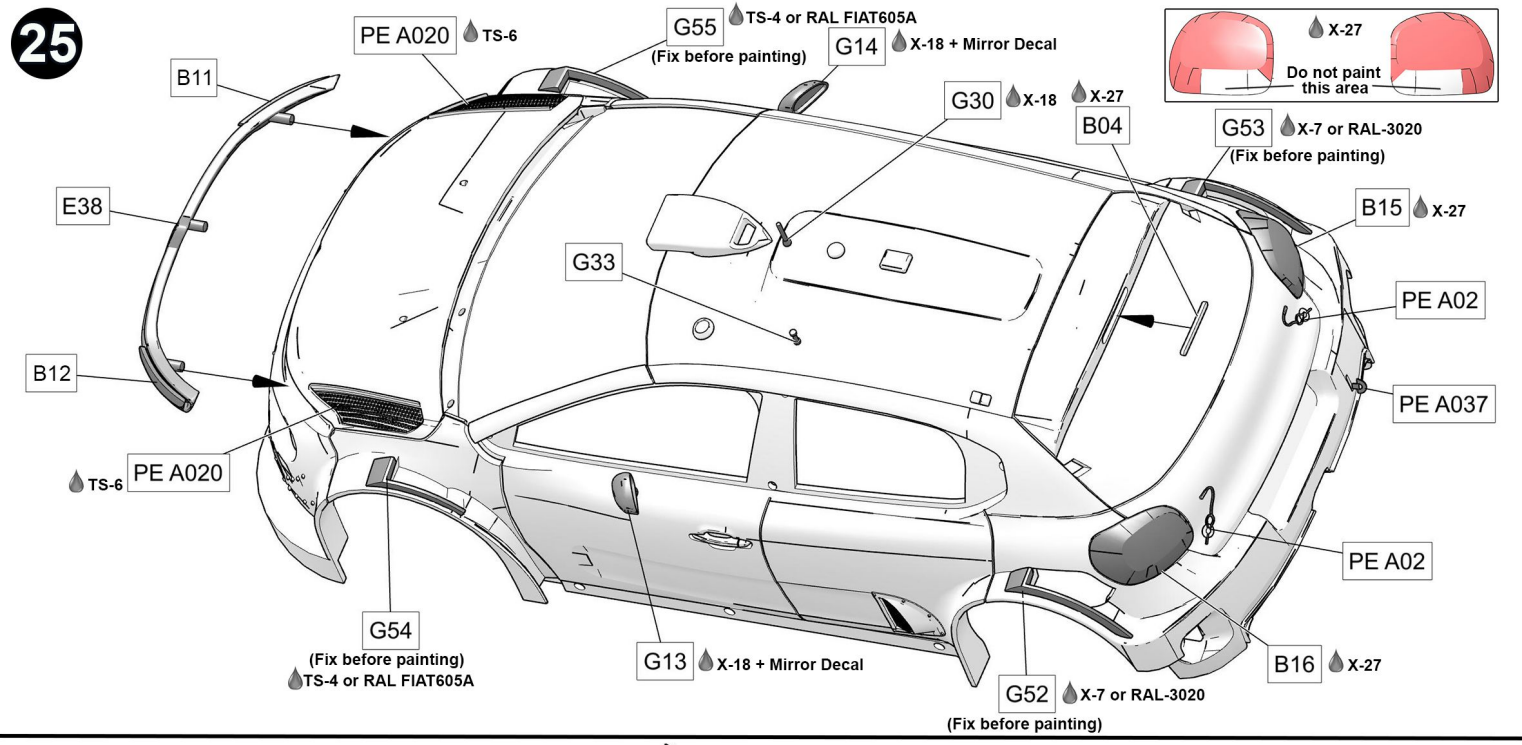
PE A020
TS-6
G55
TS-4 or RAL FIAT605A
(Fix before painting)
G14
X-18 + Mirror Decal
X-27
Do not paint this area
B11
G30
X-18
X-27
B04
G53
X-7 or RAL-3020
(Fix before painting)
E38
B15
X-27
G33
PE A02
B12
PE A037
TS-6
PE A020
PE A02
G54
(Fix before painting)
TS-4 or RAL FIAT605A
G13
X-18 + Mirror Decal
B16
X-27
G52
X-7 or RAL-3020
(Fix before painting)

26

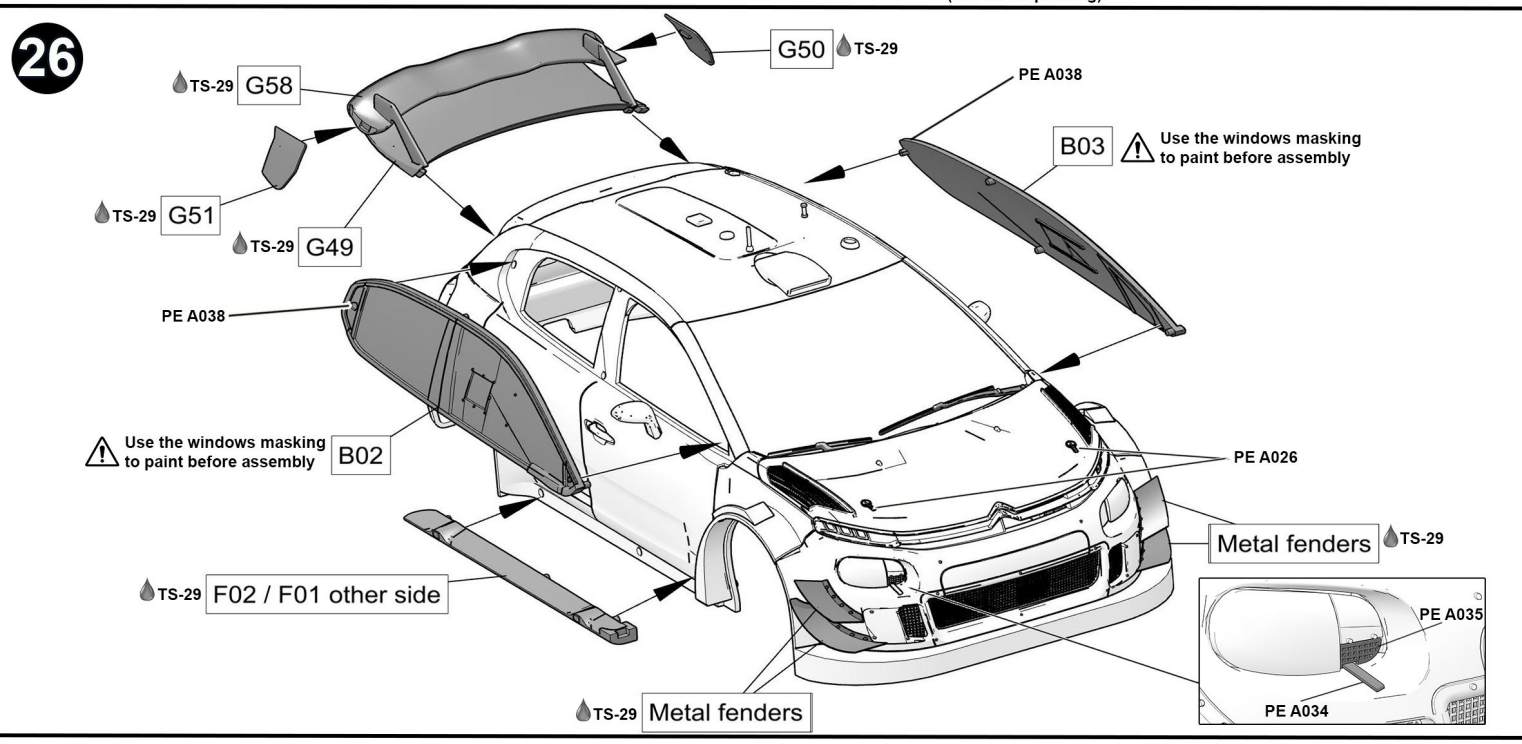
G50
TS-29
TS-29
G58
PE A038
B03
Use the windows masking to paint before assembly
TS-29
G51
TS-29
G49
PE A038
Use the windows masking to paint before assembly
B02
PE A026
Metal fenders
TS-29
TS-29
F02 / F01 other side
PE A035
PE A034
TS-29
Metal fenders

27

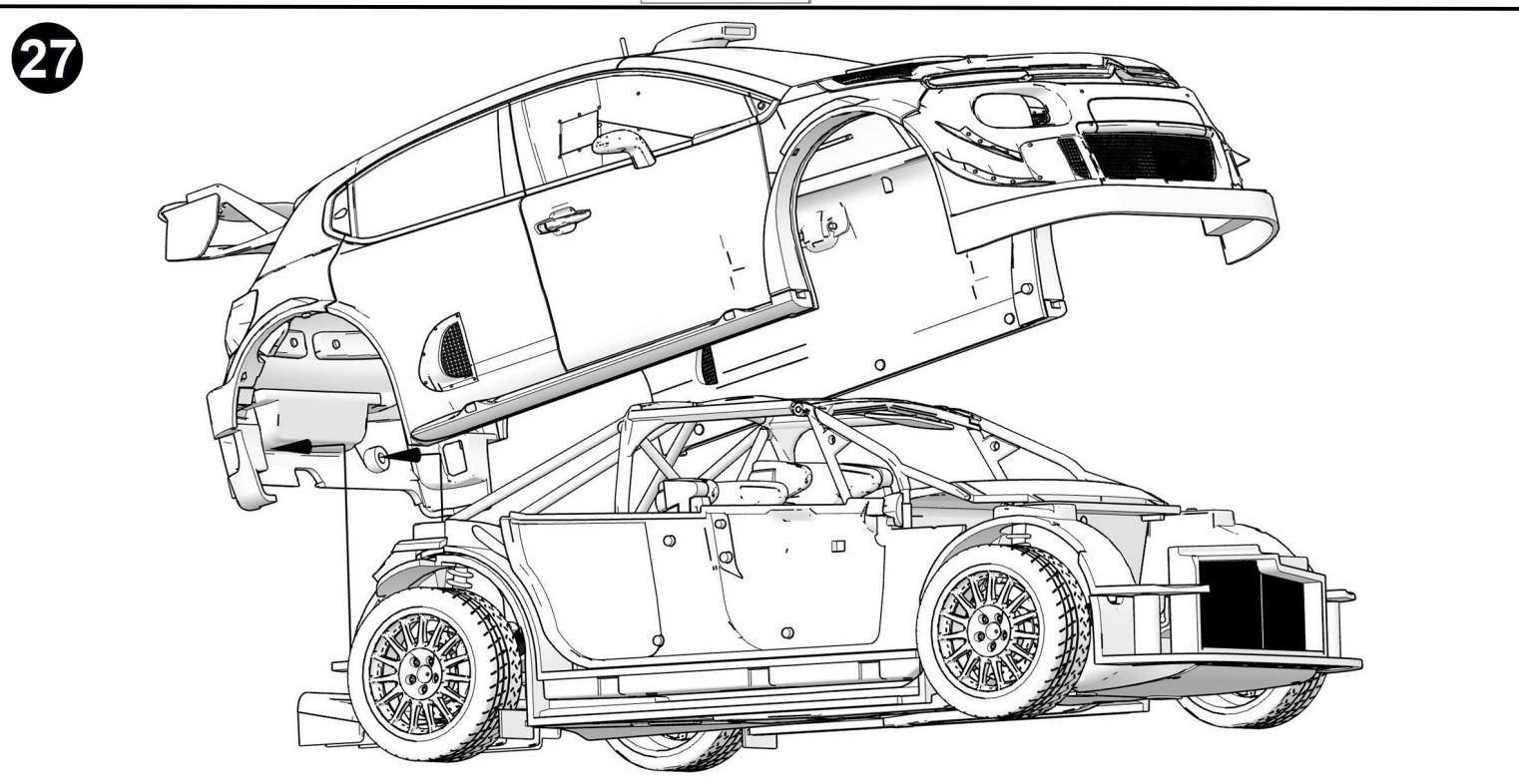

OPTIONAL PARTS

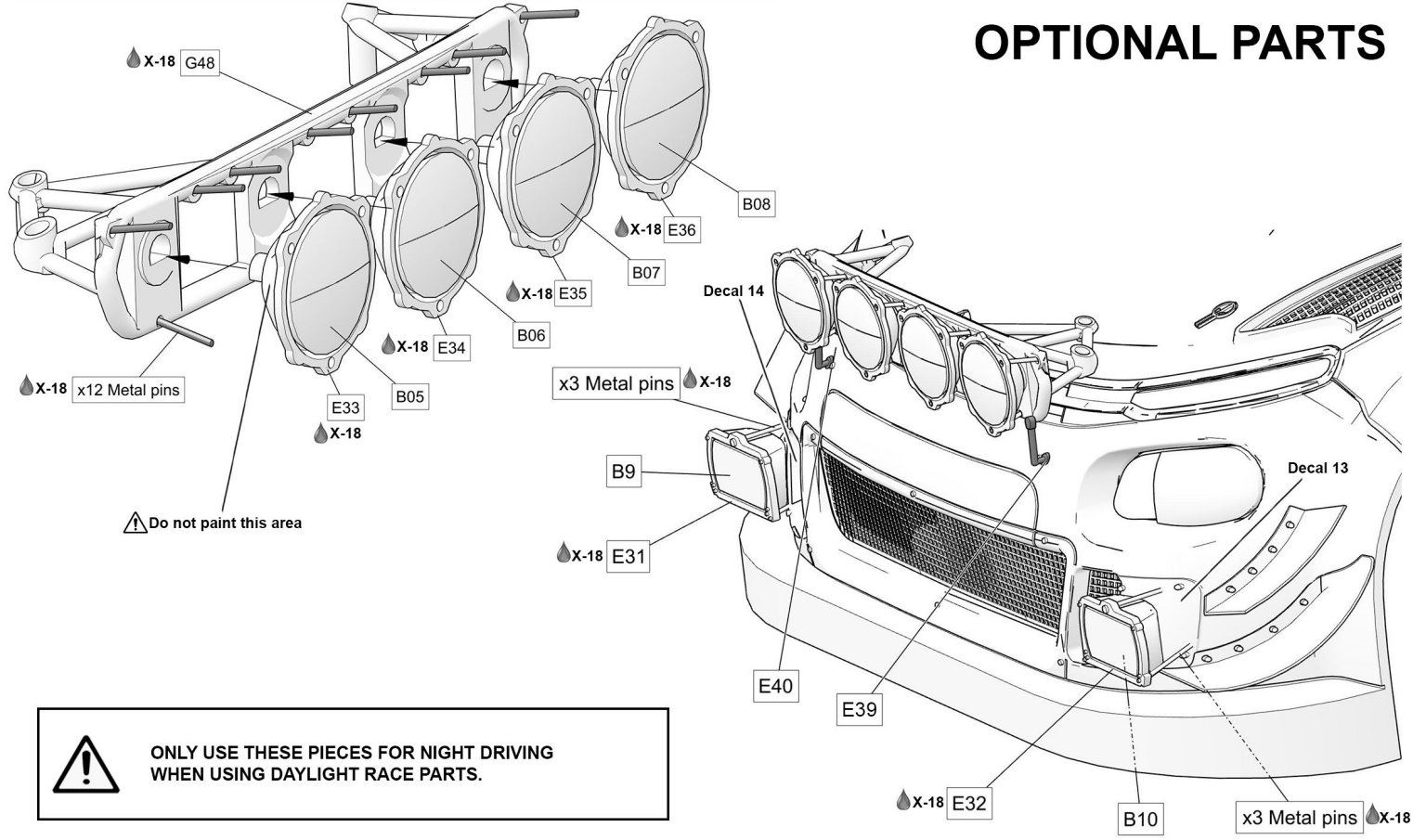

ONLY USE THESE PIECES FOR NIGHT DRIVING WHEN USING DAYLIGHT RACE PARTS.

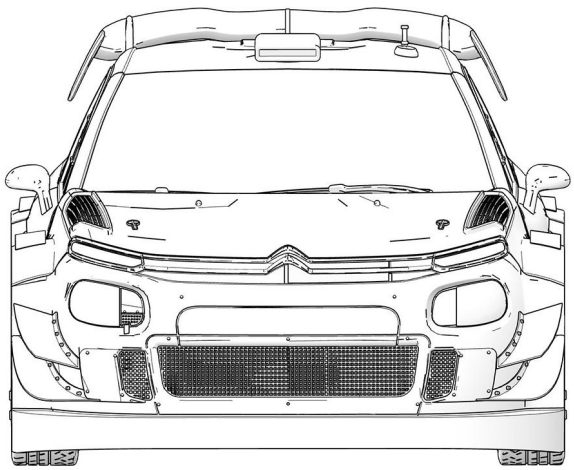

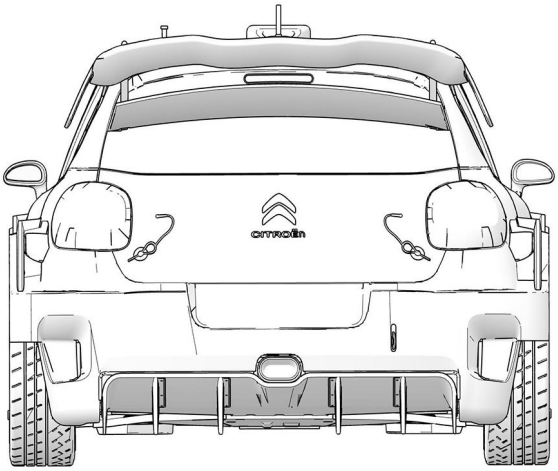

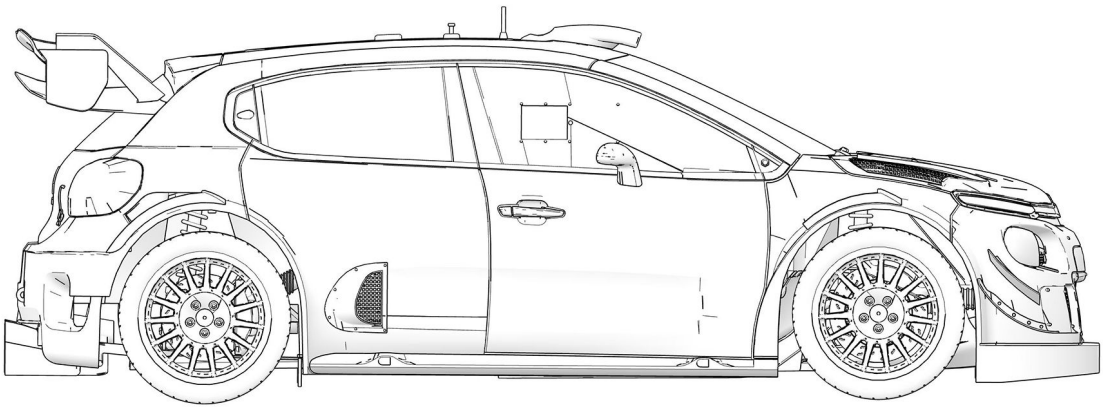

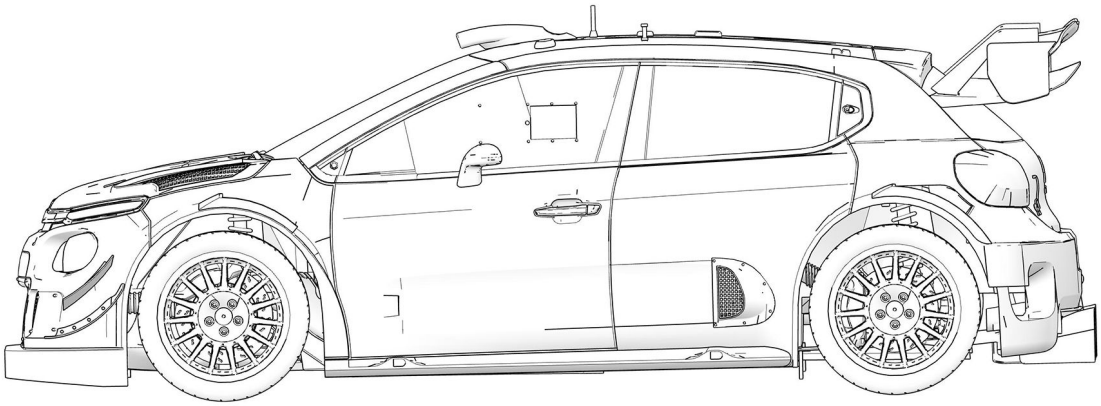

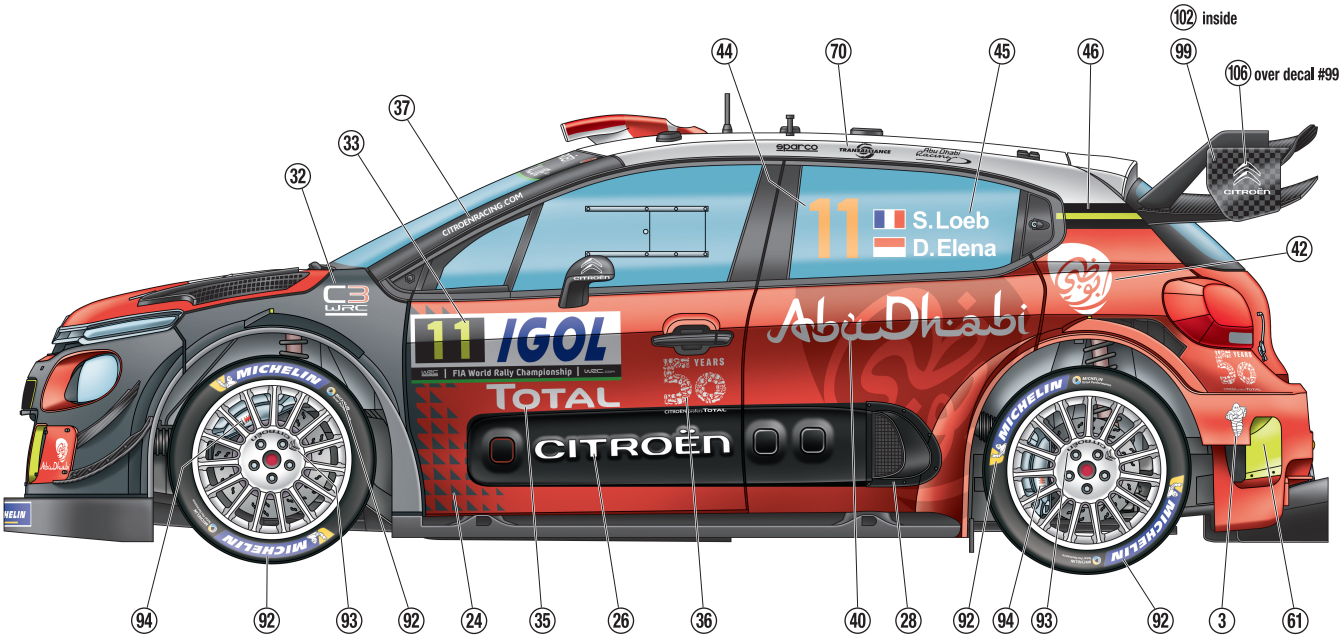
102 inside
99
106 over decal #99
44
70
45
46
37
33
32
42
S.Loeb
D.Elena
11
IGOL
FIA World Rally Championship
TOTAL
CITROËN
Abu Dhabi
C3 WRC
MICHELIN
CITROENRACING.COM
94
92
93
92
24
35
26
36
40
28
92
94
93
92
3
61

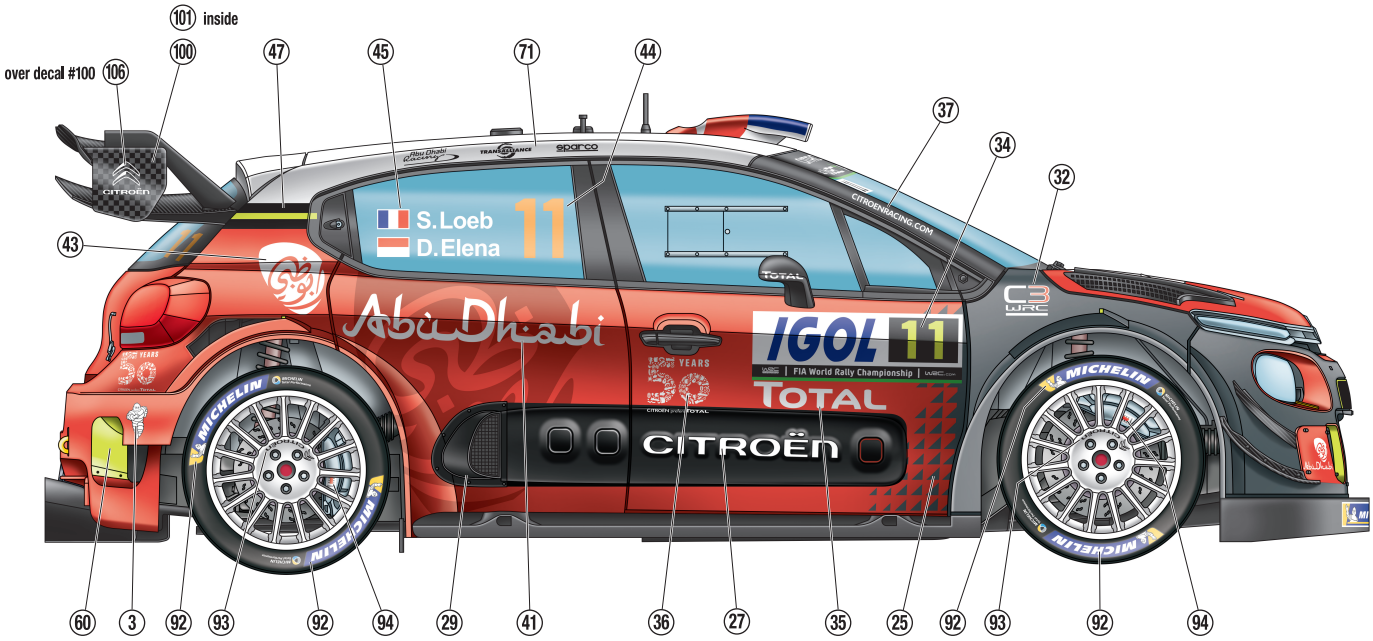
101 inside
100
over decal #100 106
47
45
71
44
37
34
32
43
S.Loeb
D.Elena
11
IGOL
FIA World Rally Championship
TOTAL
CITROËN
Abu Dhabi
C3 WRC
MICHELIN
CITROENRACING.COM
60
3
92
93
92
94
29
41
36
27
35
25
92
93
92
94

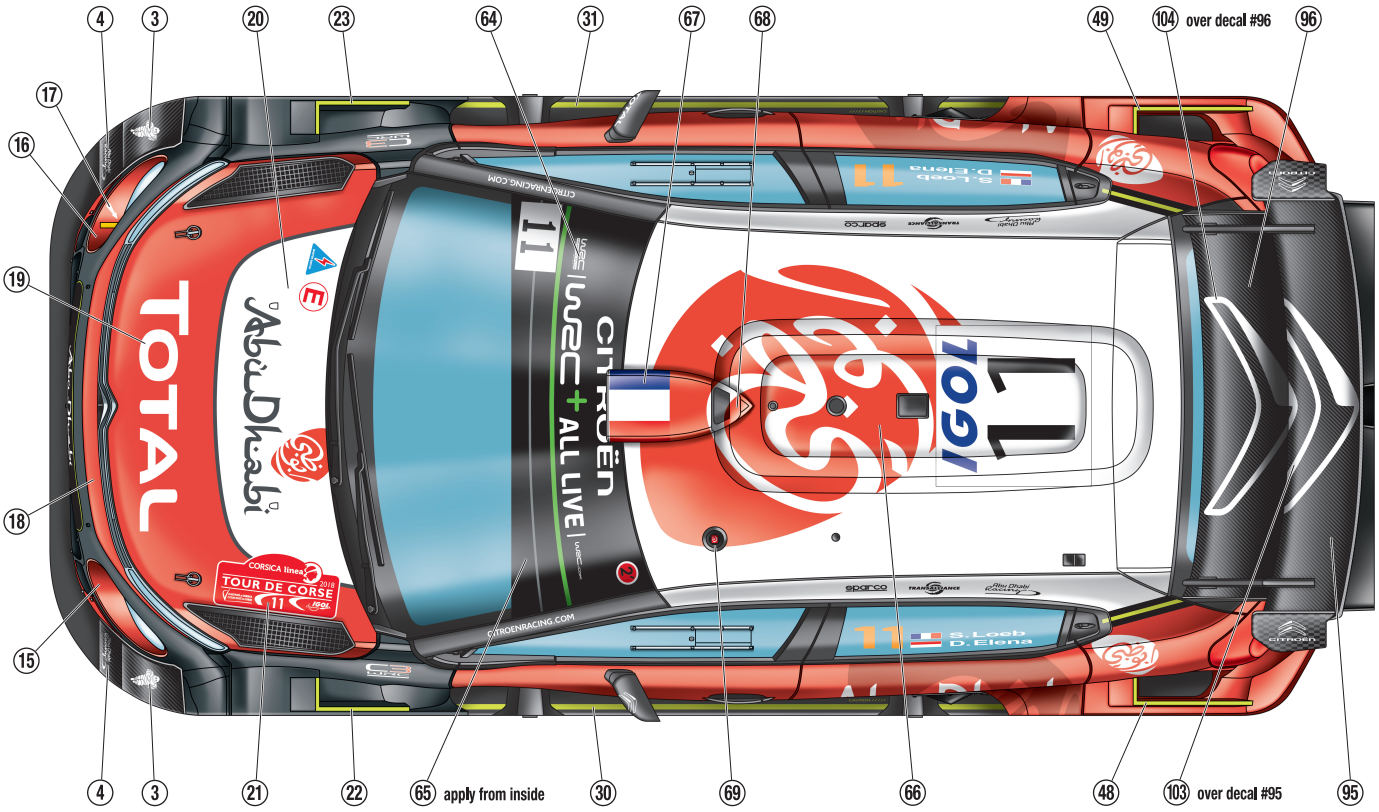
4
3
20
23
64
31
67
68
49
104 over decal #96
96
17
16
19
18
15
4
3
21
22
65 apply from inside
30
69
66
48
103 over decal #95
95
TOTAL
AbuDhabi
CITROËN
WRC + ALL LIVE
11
S.Loeb
D.Elena
CITROENRACING.COM
TOUR DE CORSE
CORSICA linea
sparco
TRANSSYLVANIA
Abu Dhabi
MICHELIN

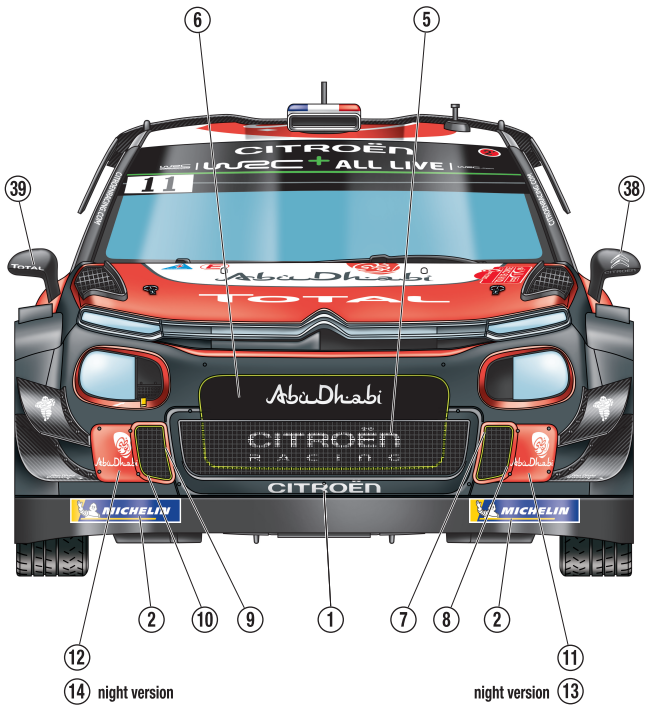
6
5
39
38
12
14 night version
2
10
9
1
7
8
2
11
night version 13
CITROËN
WRC + ALL LIVE
11
AbuDhabi
TOTAL
MICHELIN

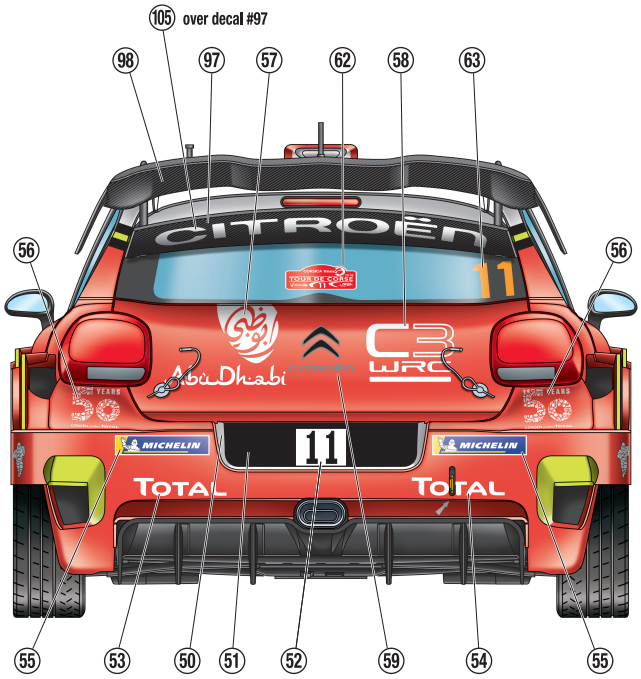
105 over decal #97
98
97
57
62
58
63
56
56
55
53
50
51
52
59
54
55
CITROËN
11
AbuDhabi
C3 WRC
MICHELIN
TOTAL