Instructions Sheet by Bollier Sylvain

## Opgelet

Niet geschikt voor kinderen jonger dan 14 jaar.
Bevat kleine onderdelen.
Een toezichthoudende volwassene moet de instructies lezen, als een kind het model monteert.
Voor het samenstellen van deze set is gereedschap nodig.
Wees extra voorzichtig om letsel te voorkomen.

## Précautions

Ce produit ne convient pas à un enfant de moins de 14 ans.
Contient de petites pièces.
La construction du modèle par un enfant doit s'effectuer sous la surveillance d'un adulte.
L'assemblage du modèle requiert des outils.
Utilisez-les avec précaution pour éviter toute blessure.

## Caution

Not suitable for children under 14 years.
Contains small parts.
A supervising adult should read the instructions if a child assembles the model.
Assembling this kit need tools.
Extra care should be taken to avoid injury.

| TAMIYA | N5 Colors | HUMBROL | Mr.Hobby Aqueous | |
|---|---|---|---|---|
| TS-8 | C040 | / | / | Gloss Red or RAL-3020 / Pantone 179C |
| TS-17 | X010 | / | / | Gloss Aluminium |
| TS-26 | C041 | / | / | Pure White |
| TS-4 | C042 | / | / | Flat Grey or RAL-FIAT605A / Pantone 11C |
| X-1 | / | 21 | H2 | Gloss Black |
| X-2 | / | 22 | H1 | Gloss White |
| X-5 | / | 3 | H6 | Green |
| X-7 | / | 19 | H3 | Gloss Red |
| X-8 | / | 69 | H4 | Lemon Yellow |
| X-11 | / | 11 | H8 | Silver |
| X-12 | / | 16 | H9 | Gold Leaf |
| X-18 (TS-29) | / | 85 | / | Semi Gloss Black |
| X-27 | / | 1321 | H90 | Clear Red |
| X-31 | / | / | / | Titanium Gold |
| X-32 | / | / | / | Titanium Silver |
| X-33 | / | / | / | Bronze |
| XF-1 (TS-6) | X011 | 33 | H12 | Matt Black |
| XF-16 | / | 56 | H8 | Flat Aluminium |
| XF-19 | / | 64 | H308 | Sky Grey |
| XF-54 | / | 140 | H317 | Flat Dark Sea Grey |
| XF-56 | / | 56 | / | Flat Metallic Grey |
| XF-59 | / | 93 | H79 | Desert Yellow |
| XF-85 | / | / | / | Rubber Black |

PREPARE BEFORE ASSEMBLY

- CUTTER
- NIPPER
- TWEEZERS
- DRILLS

- PLASTIC CEMENT
- CEMENT
- DECAL SOFTENER

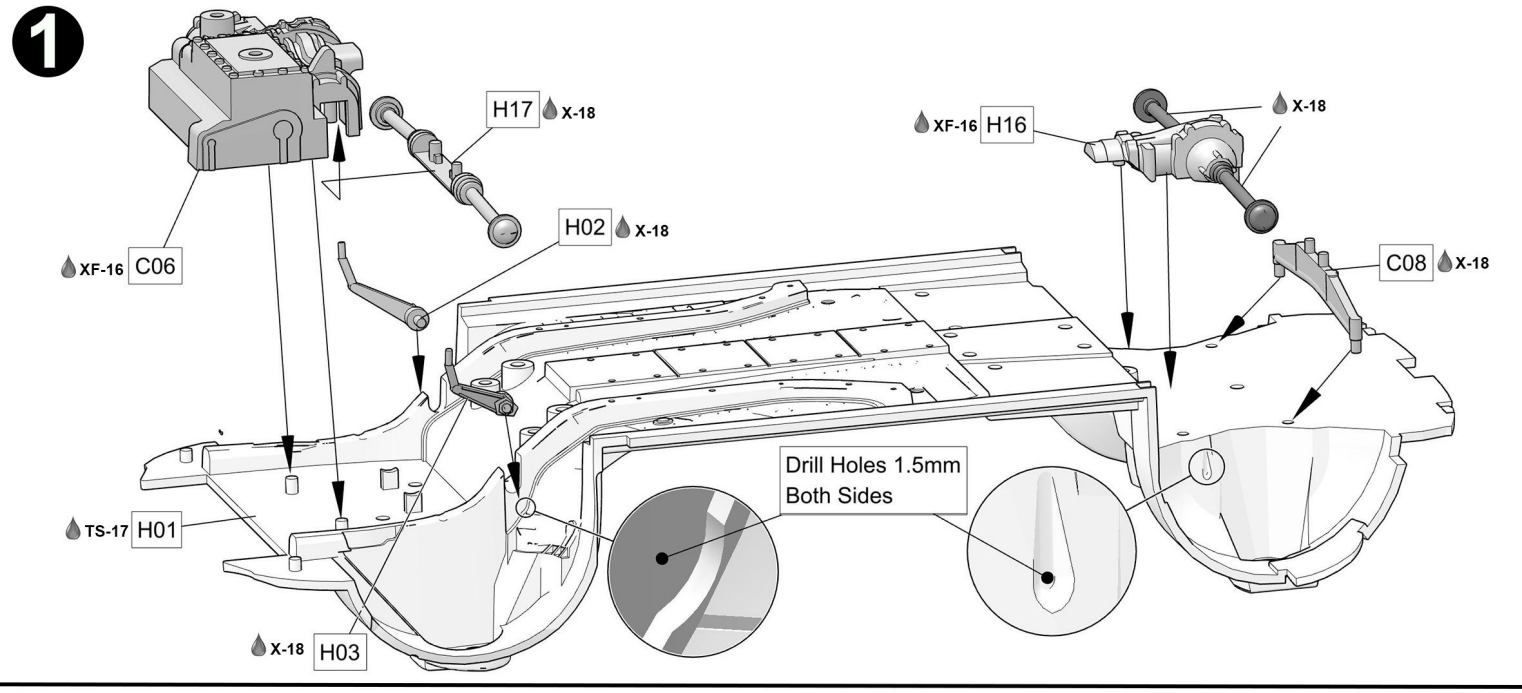
1
H17
X-18
XF-16
H16
X-18
H02
X-18
XF-16
C06
C08
X-18
Drill Holes 1.5mm
Both Sides
TS-17
H01
X-18
H03

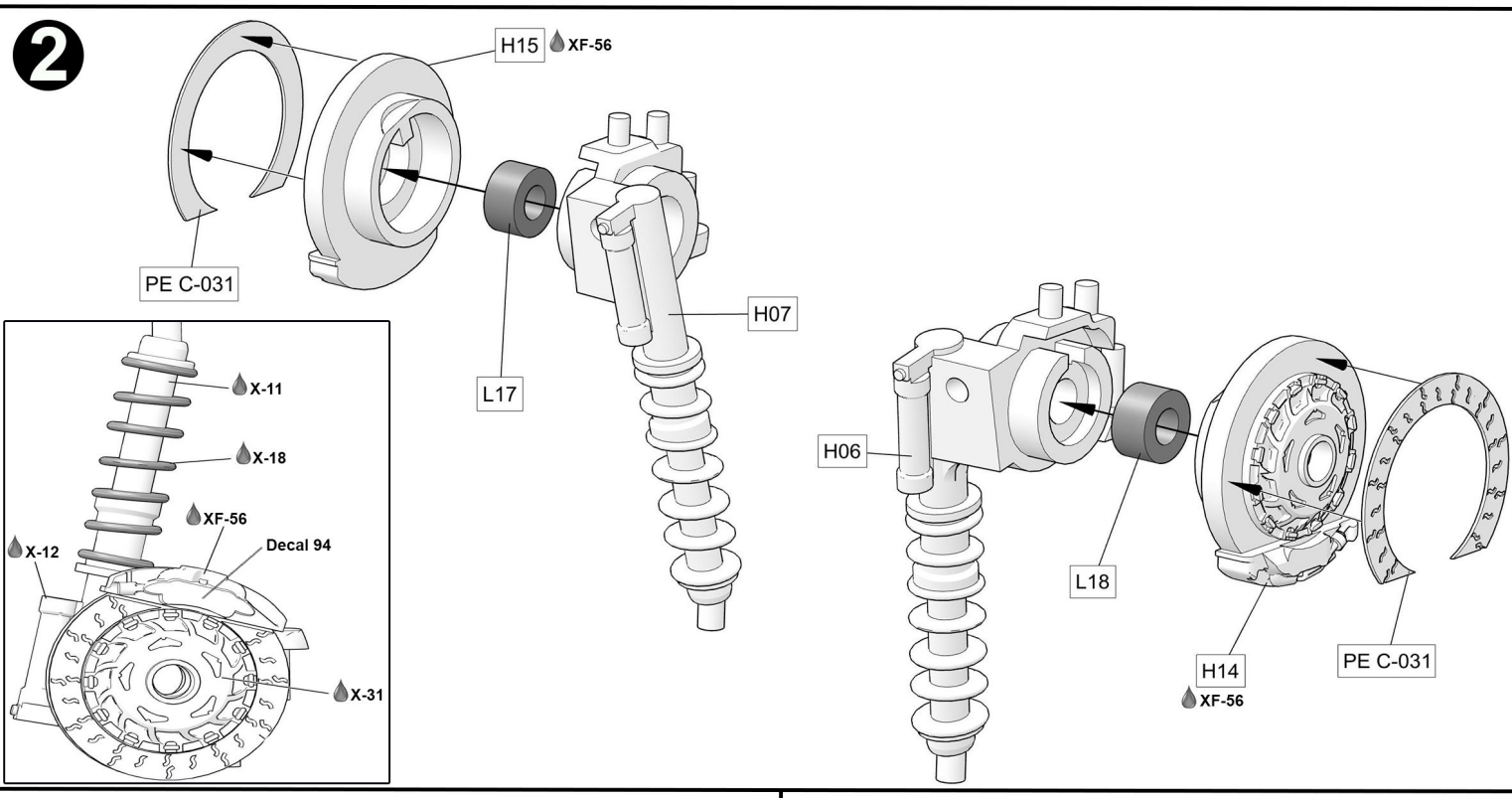
2
H15
XF-56
PE C-031
H07
L17
X-11
X-18
XF-56
Decal 94
X-12
X-31
H06
L18
H14
XF-56
PE C-031

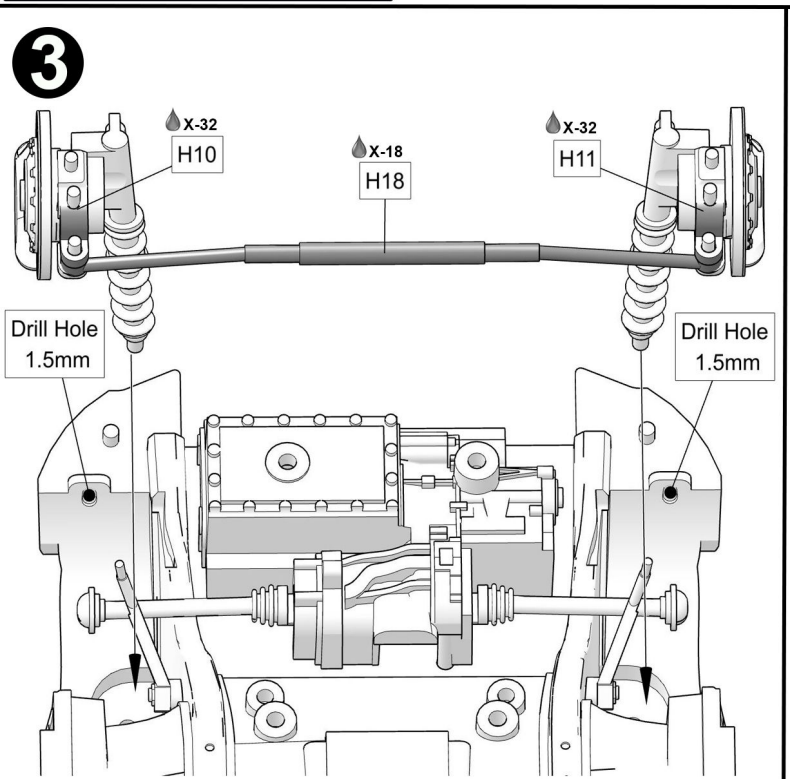
3
X-32
H10
X-18
H18
X-32
H11
Drill Hole
1.5mm
Drill Hole
1.5mm

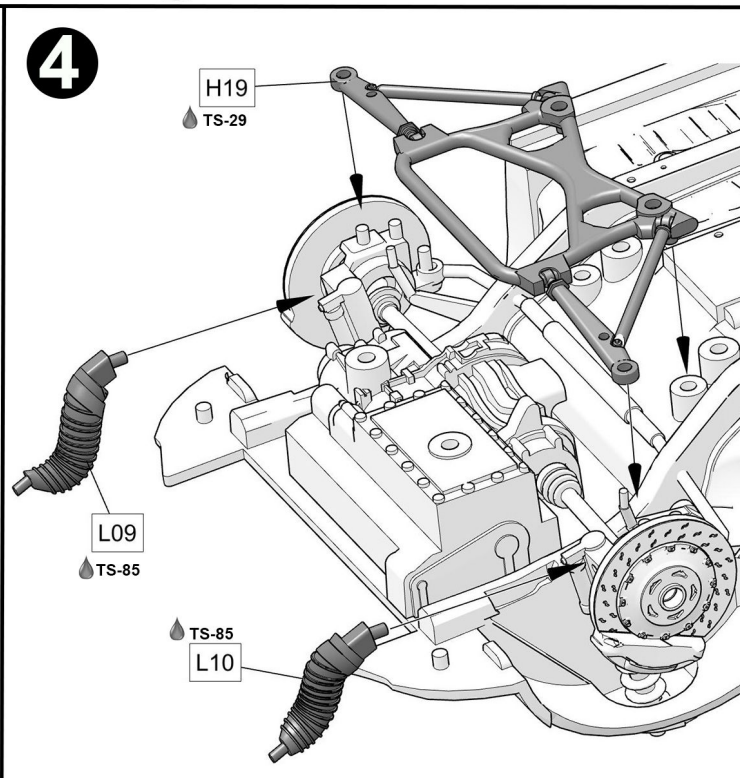
4
H19
TS-29
L09
TS-85
TS-85
L10

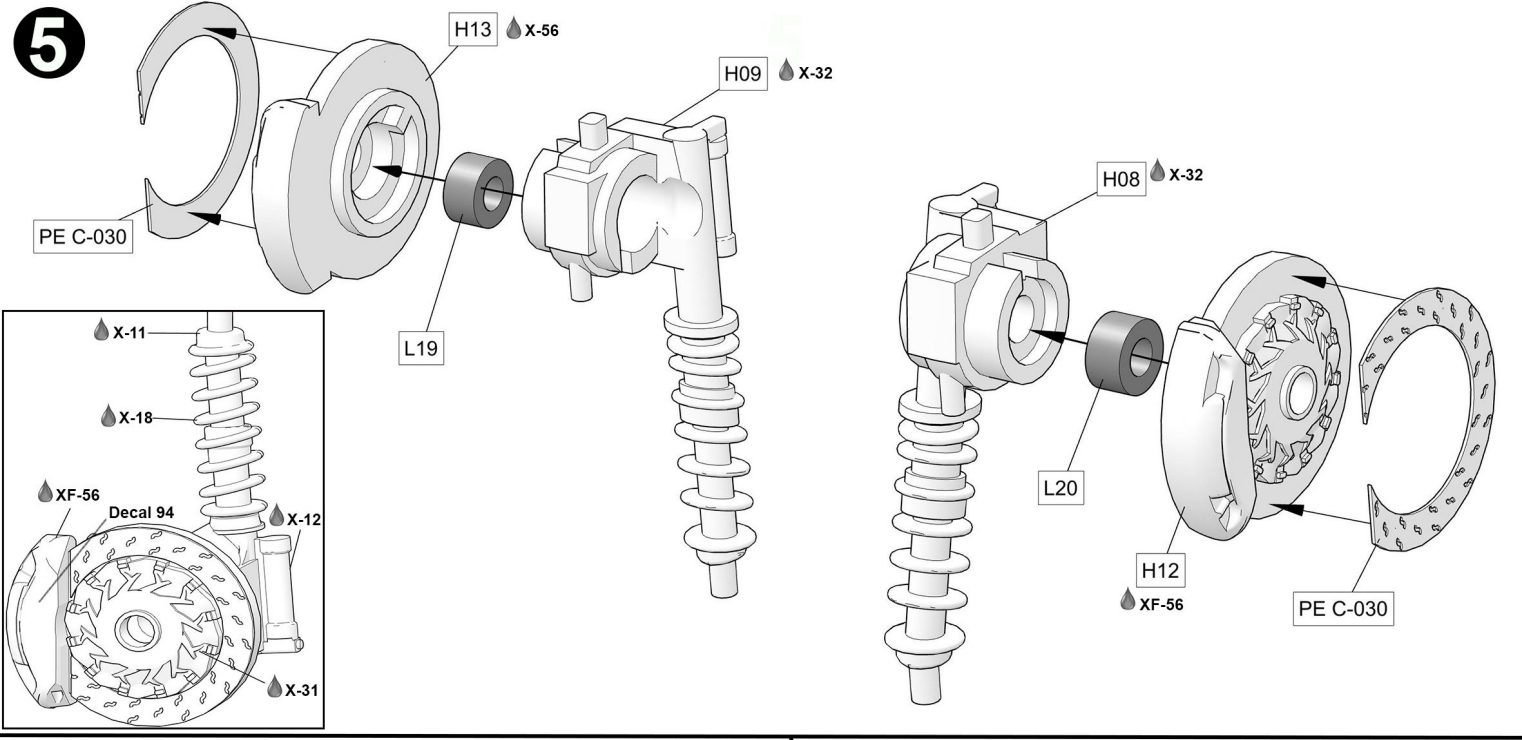
5
H13
X-56
H09
X-32
PE C-030
L19
X-11
X-18
XF-56
Decal 94
X-12
X-31
H08
X-32
L20
H12
XF-56
PE C-030

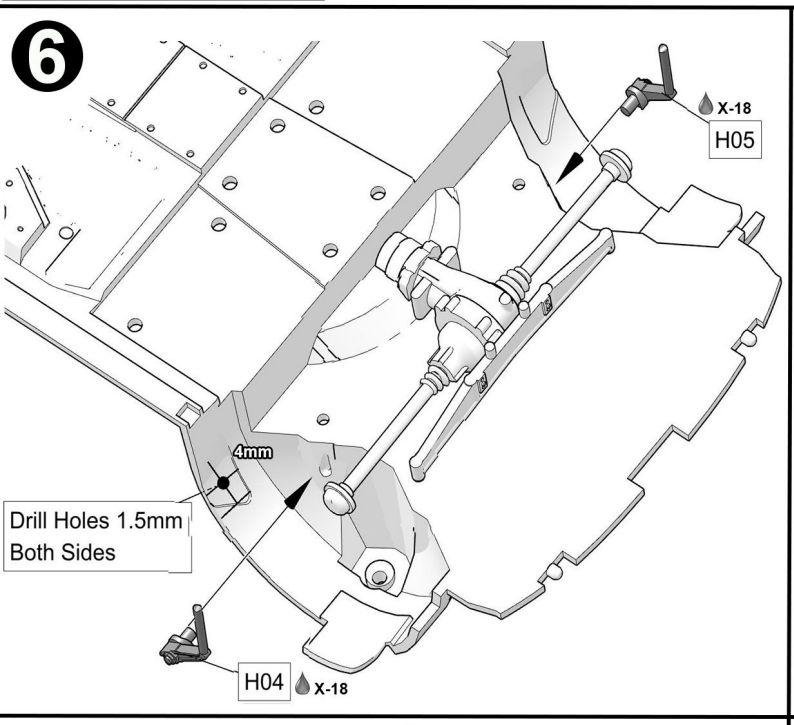
6
X-18
H05
4mm
Drill Holes 1.5mm
Both Sides
H04
X-18

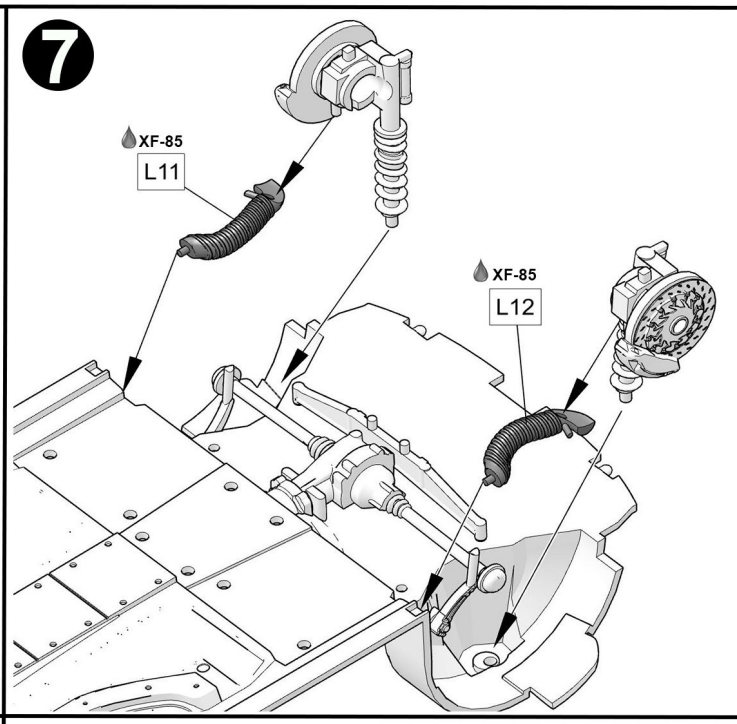
7
XF-85
L11
XF-85
L12

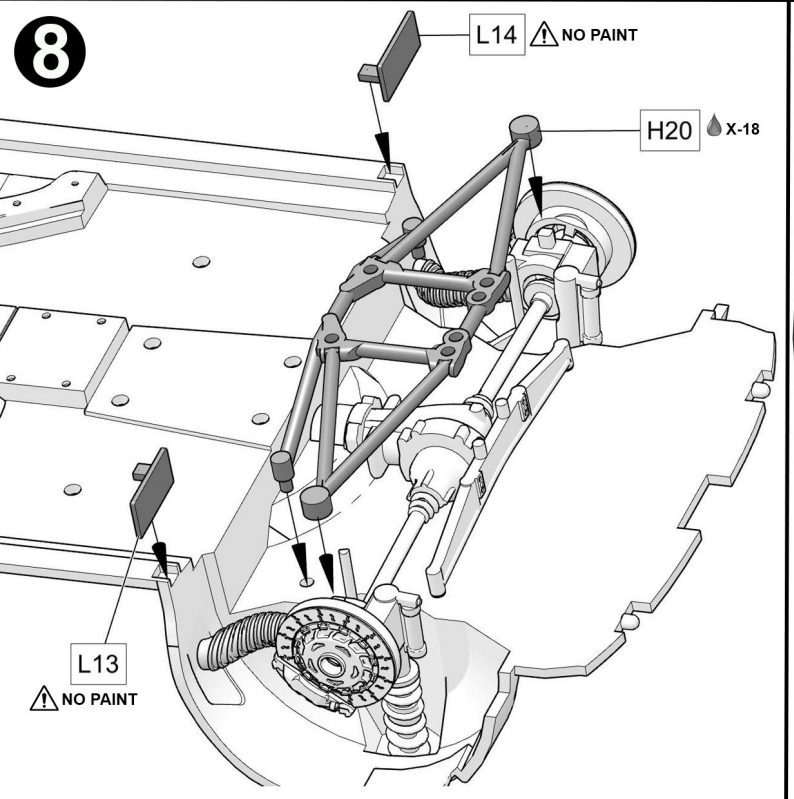
8
L14
NO PAINT
H20
X-18
L13
NO PAINT

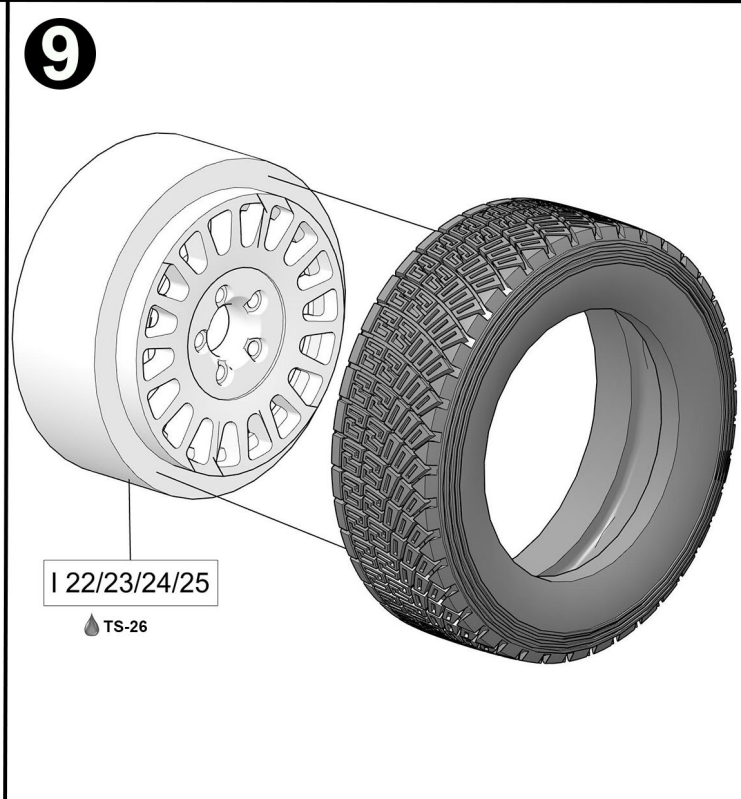
9
I 22/23/24/25
TS-26

## 10

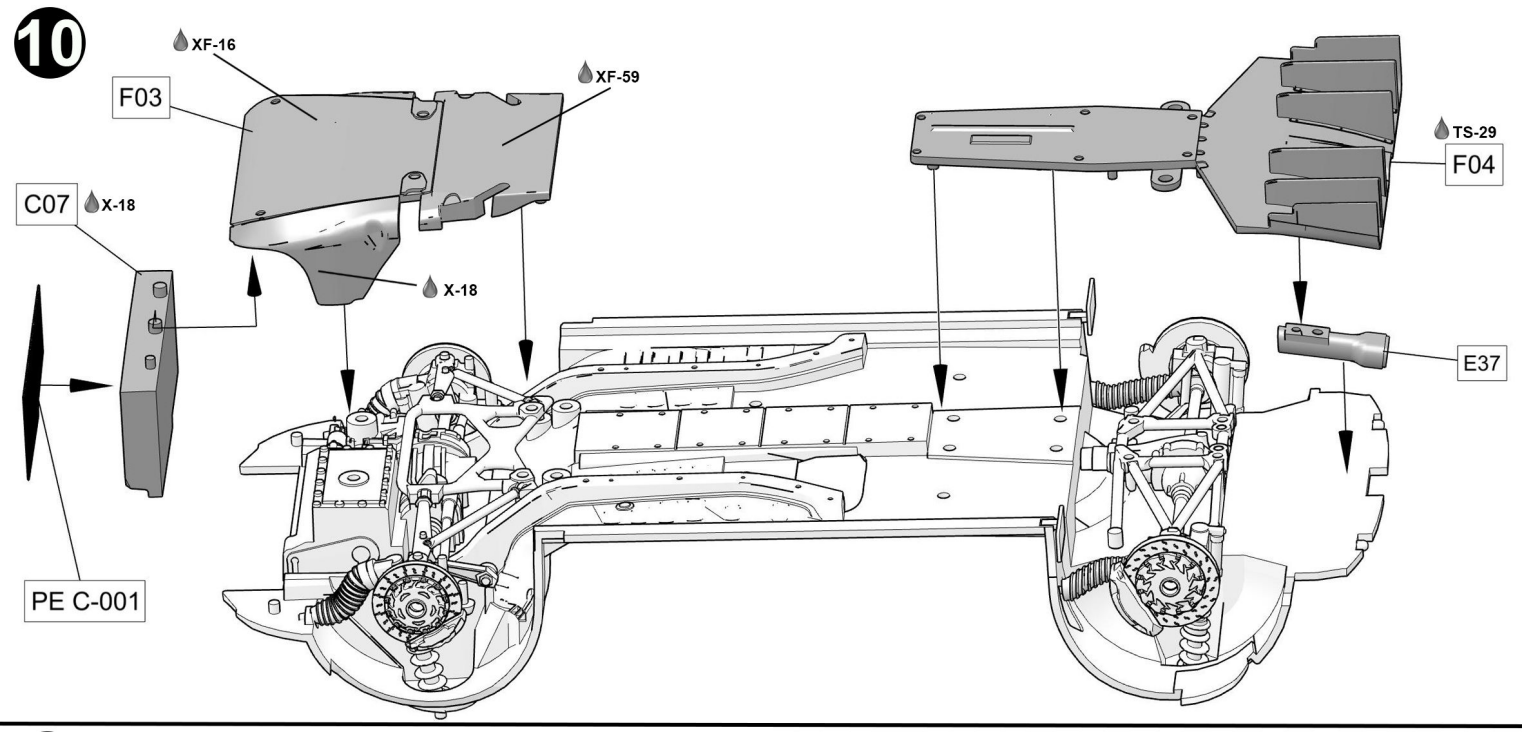
XF-16
F03
XF-59
C07
X-18
X-18
TS-29
F04
E37
PE C-001

## 11

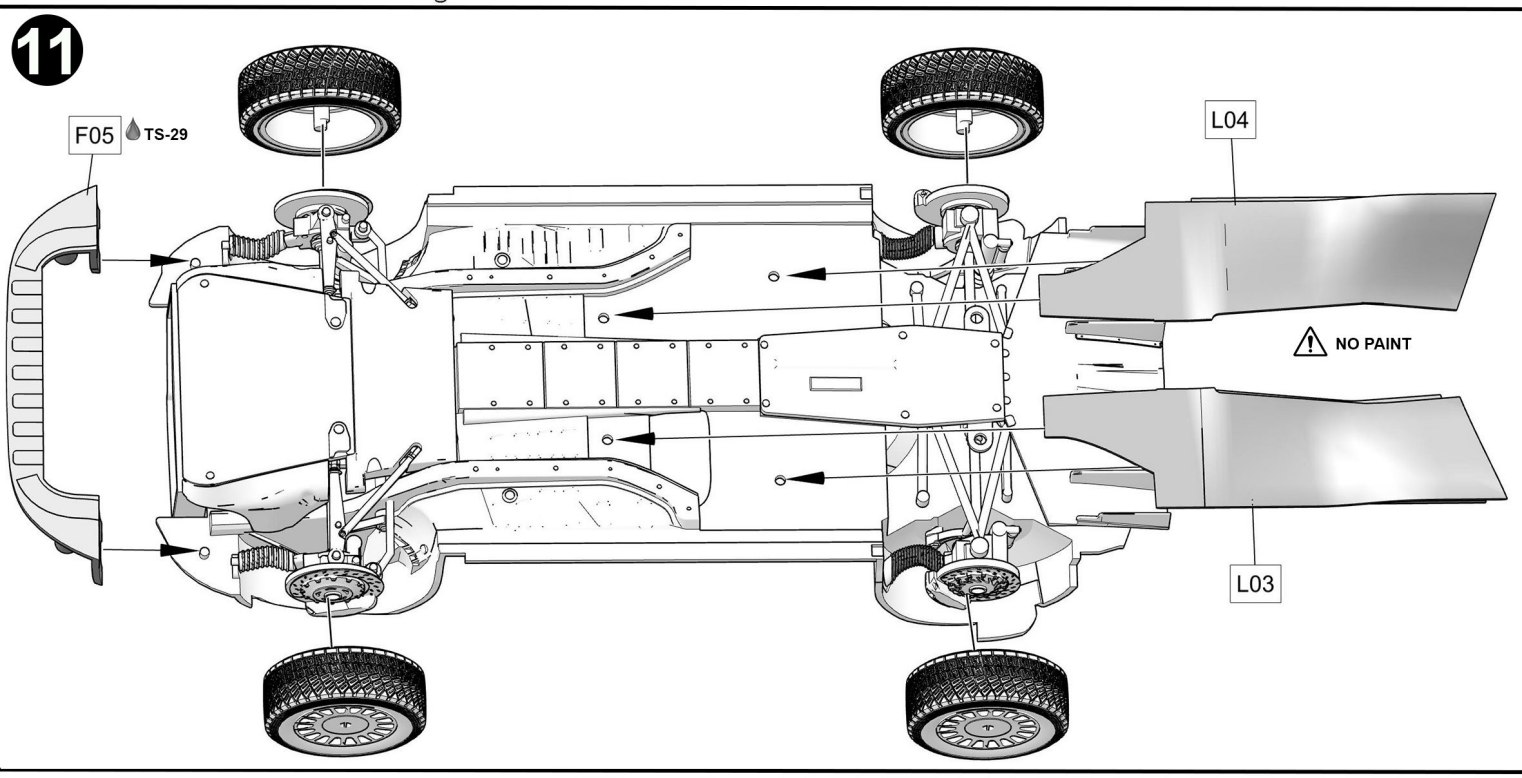
F05
TS-29
L04
NO PAINT
L03

## 12

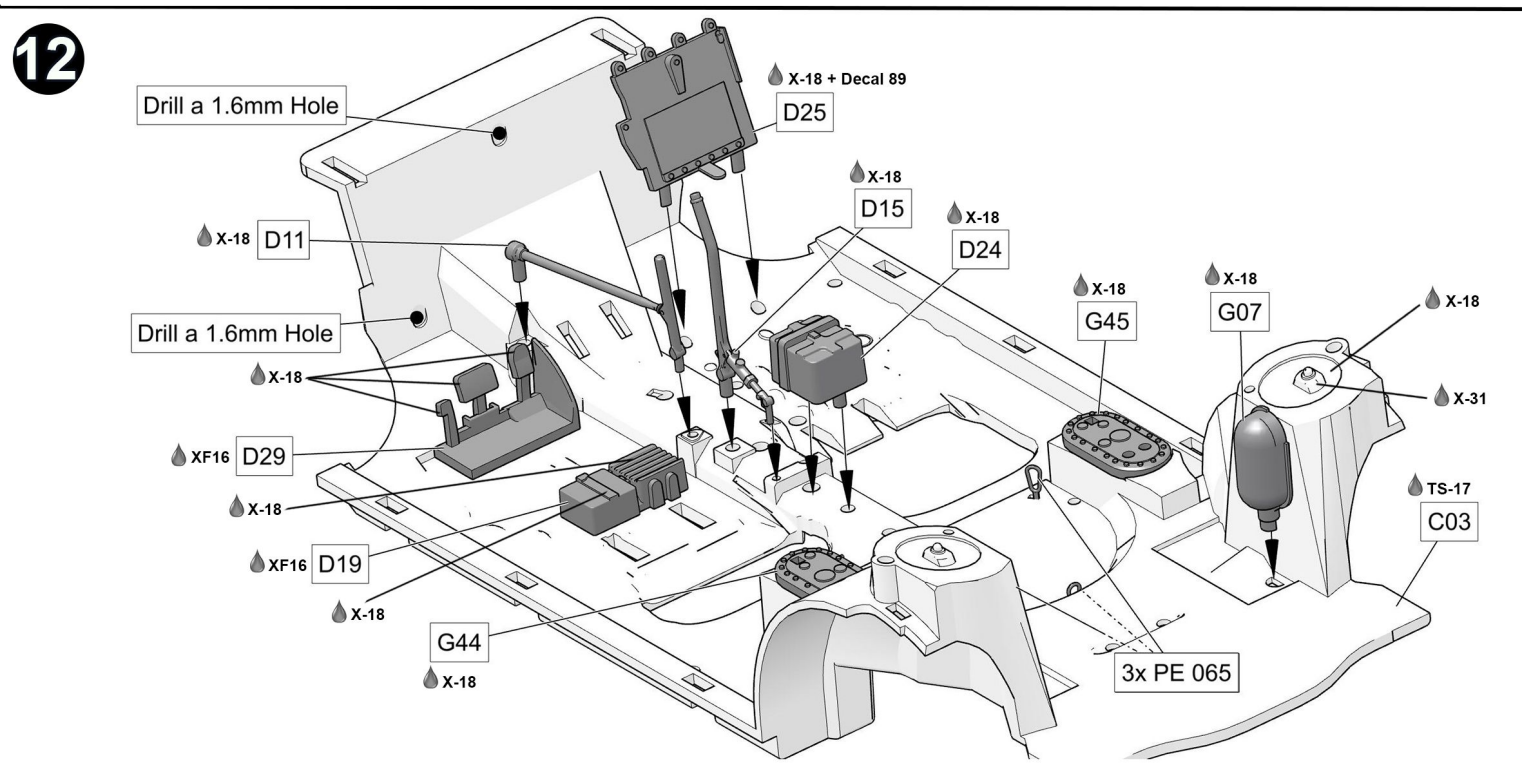
Drill a 1.6mm Hole
X-18 + Decal 89
D25
X-18
D15
X-18
D24
X-18
D11
Drill a 1.6mm Hole
X-18
G45
X-18
G07
X-18
X-31
X-18
XF16
D29
X-18
TS-17
C03
XF16
D19
X-18
G44
X-18
3x PE 065

## 13

X-7
X-5
X-8
X-18 + Decal 88
D16
X-18 + Decal 87
D23
X-18
D13
D17
X-18
X-8
G41/38
X-18
G37
X-18
D26
D02
X-18
D01
X-18
D27
X-18
X-8
G39/40
G36
X-18
X-11 + Decal 90

## Seats Step X2

PE SKD-042
PE SKD-042
Decal 76 for Driver seat
Decal 77 for Co-Driver
Decal 75
Decal 79
PE SKD-042
PE SKD-043
PE SKD-043
PE N-056
PE-077
Driver seat : C09
Co-Driver : C10
TS-6

## 14

Paint before assembly
X-11
X-1
X-18
XF-54
X-11
X-1
X-1
XF-54
X-18

X-18
D05
TS-6
G42
TS-6
G10
C01
TS-6
C04

X-18
TS-6
G43
D06
TS-17
TS-6
G11
C02
C05
TS-6

## 15

1x PE B-001

3x PE 065

TS-26
I21

X-18
G29
G15
X-18
HUMBROL 47
XF-16
G06
X-18
G28
X-18
G08
XF-59

16

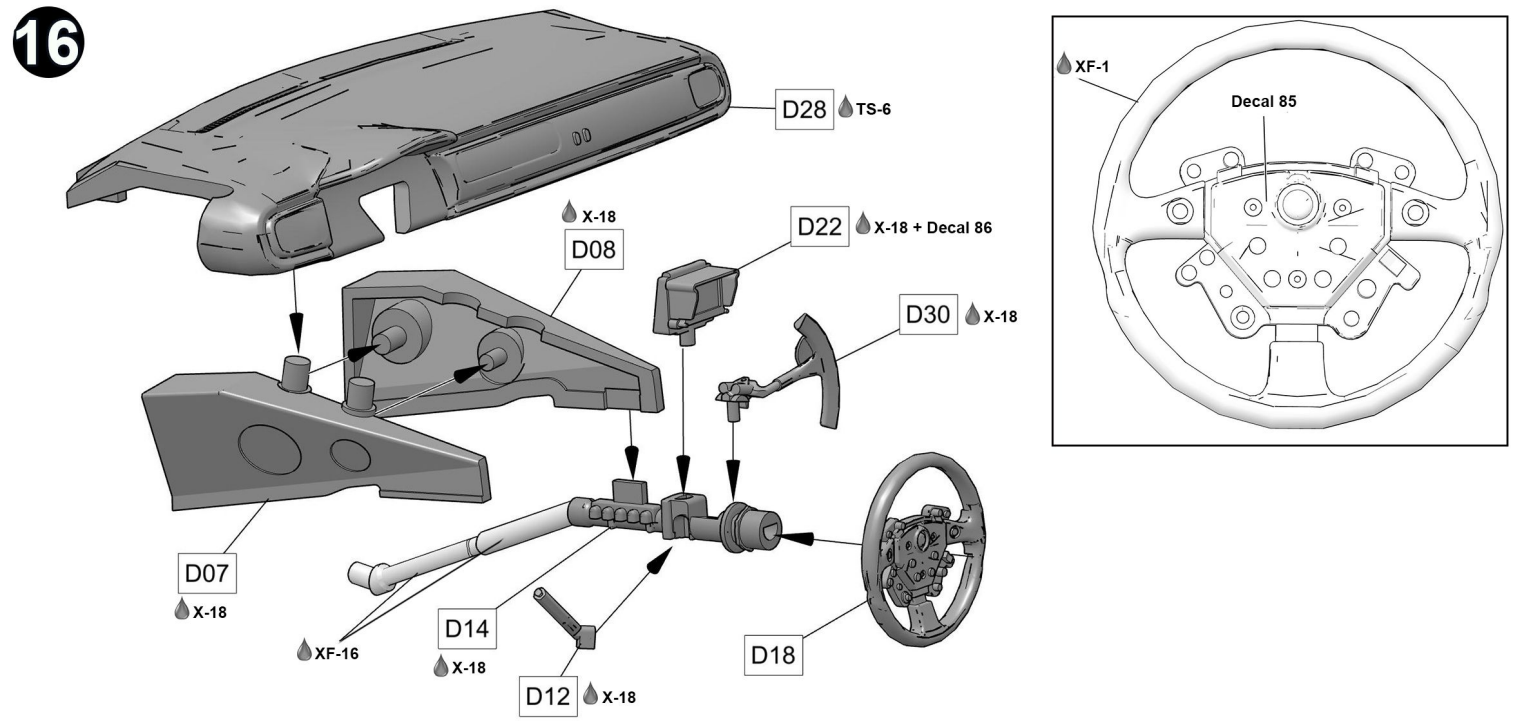
D28
TS-6
X-18
D08
D22
X-18 + Decal 86
D30
X-18
D07
X-18
XF-16
D14
X-18
D12
X-18
D18
XF-1
Decal 85

17

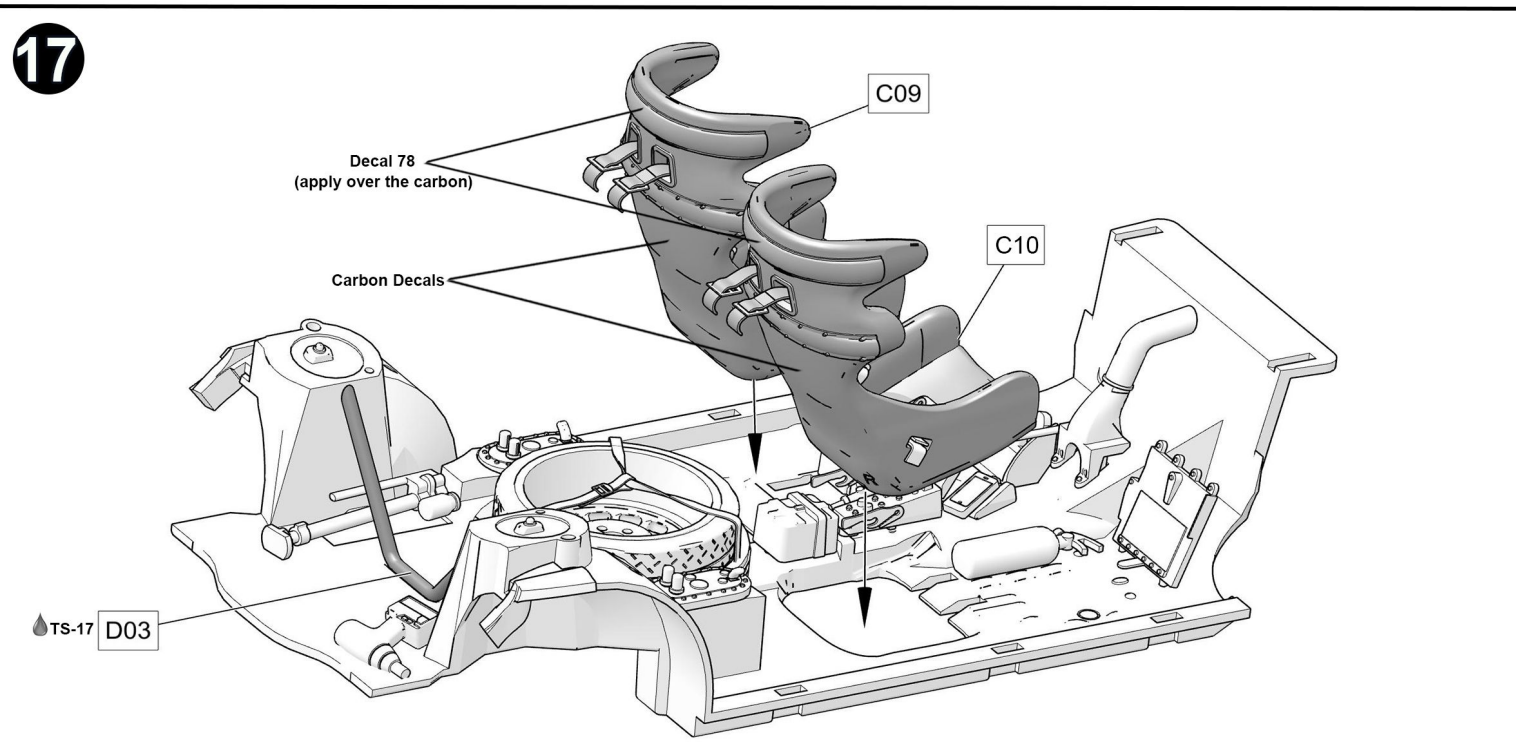
C09
Decal 78
(apply over the carbon)
C10
Carbon Decals
TS-17
D03

18

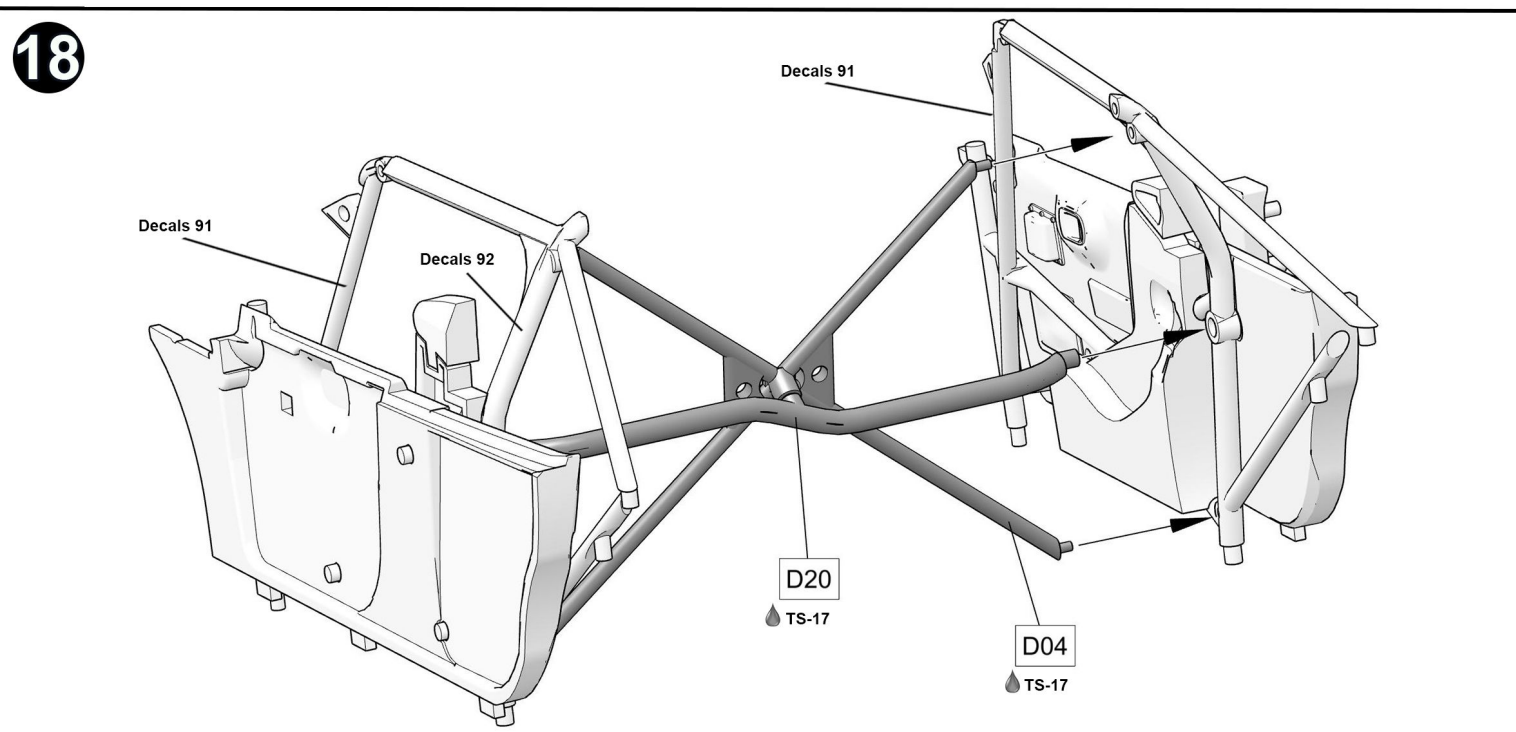
Decals 91
Decals 91
Decals 92
D20
TS-17
D04
TS-17

19

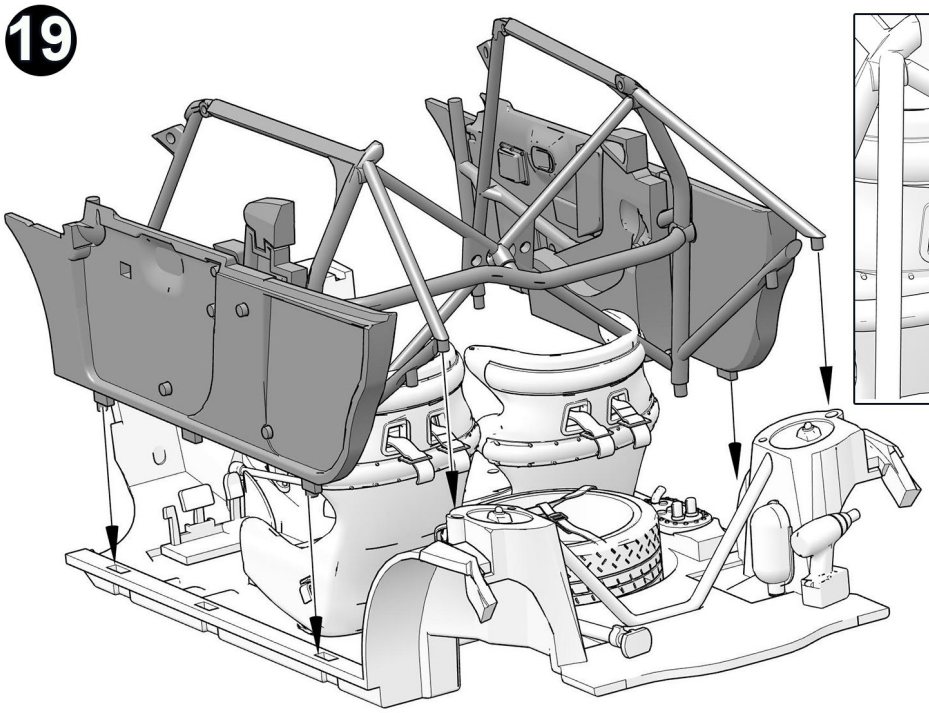

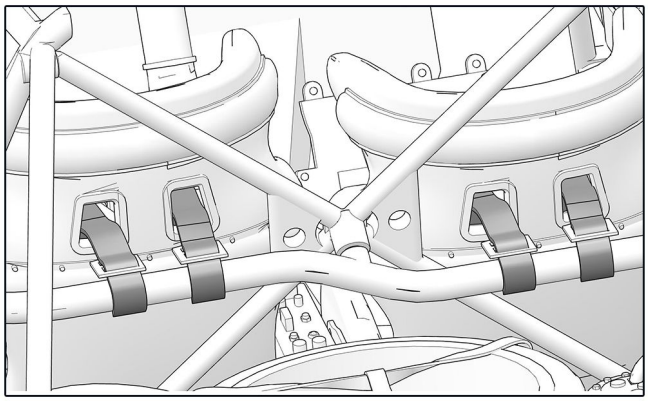

⚠ **Fix the harnesses to the bar**

20

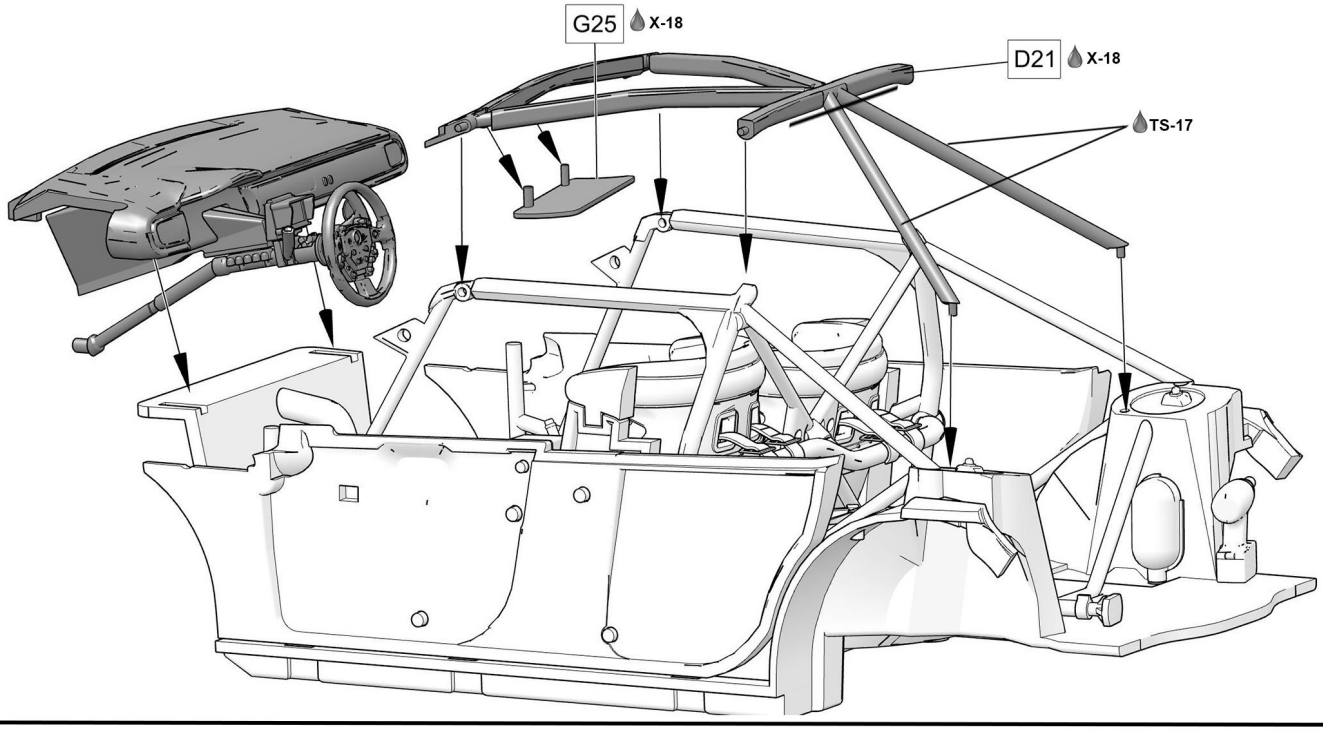


21

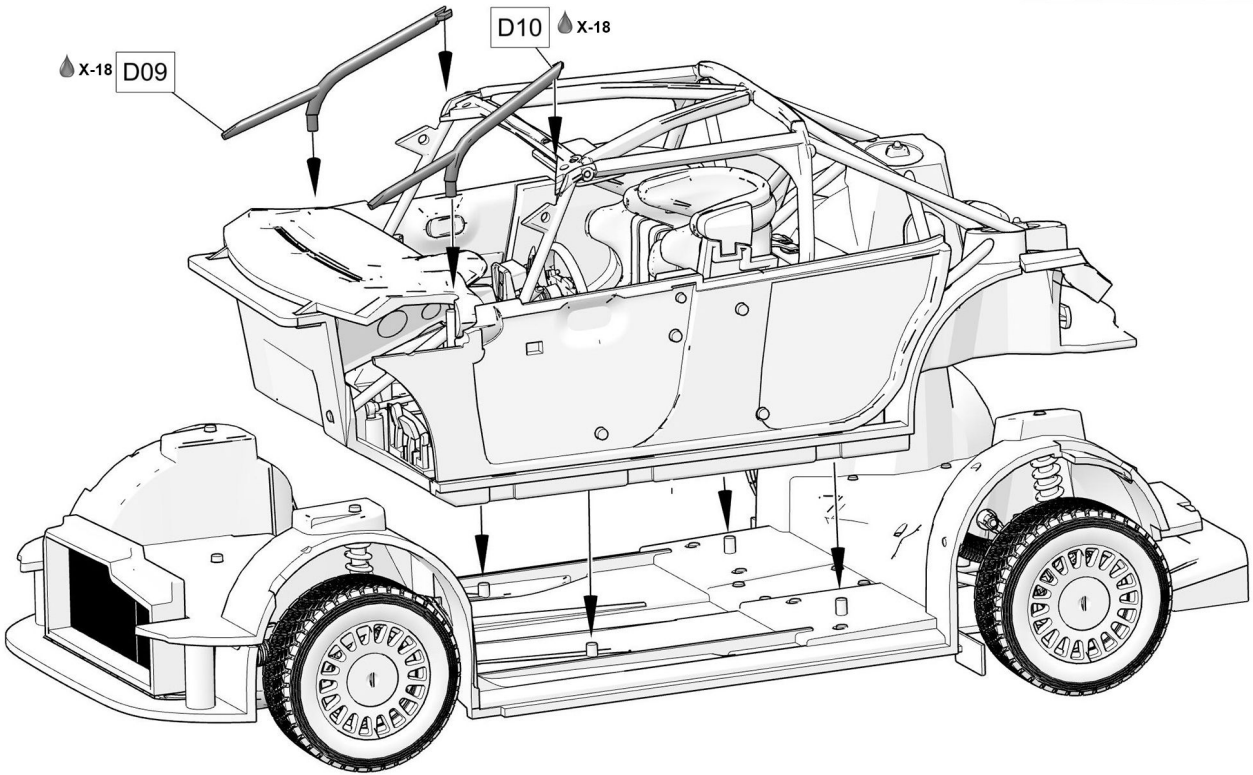

## 22

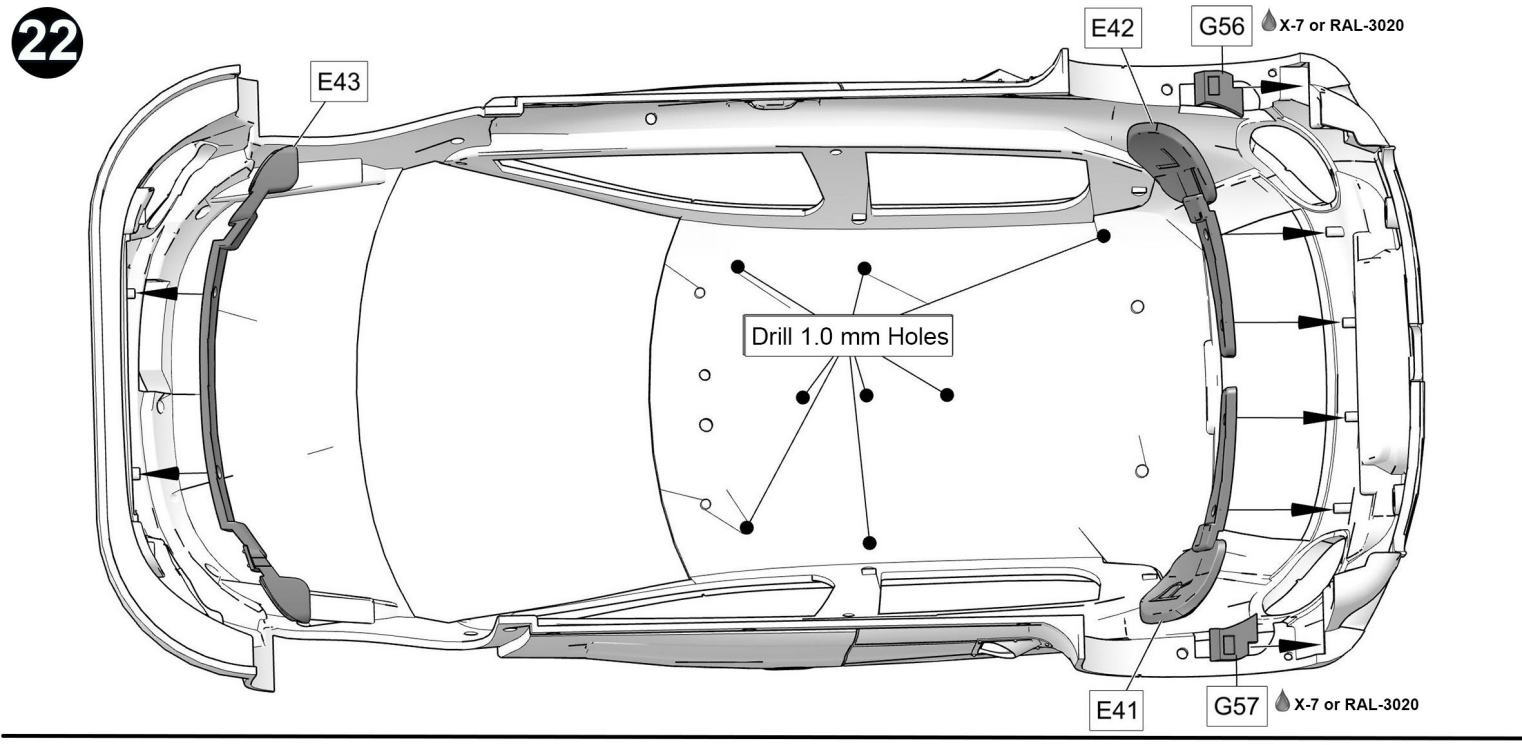
E42
G56
X-7 or RAL-3020
E43
Drill 1.0 mm Holes
E41
G57
X-7 or RAL-3020

## 23

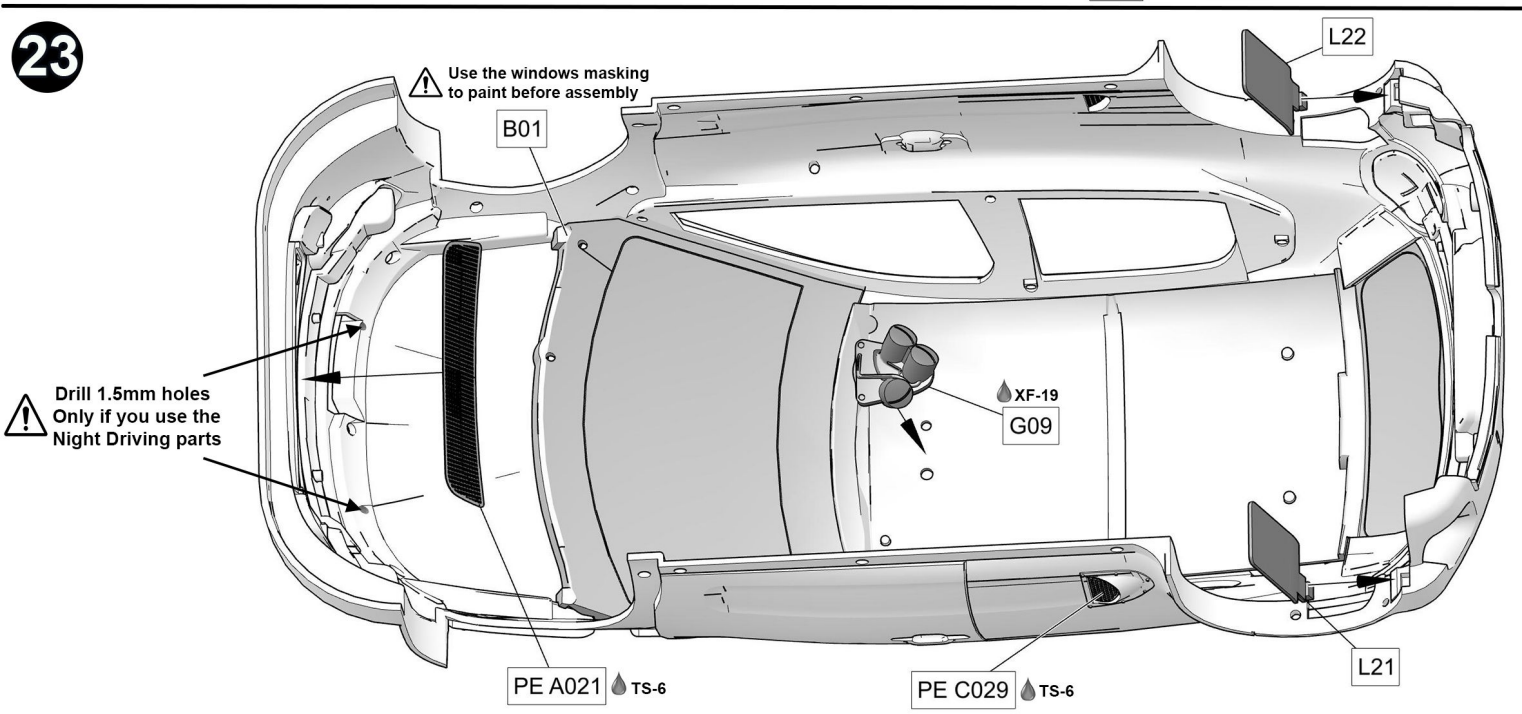
L22
Use the windows masking
to paint before assembly
B01
Drill 1.5mm holes
Only if you use the
Night Driving parts
XF-19
G09
PE A021
TS-6
PE C029
TS-6
L21

## 24

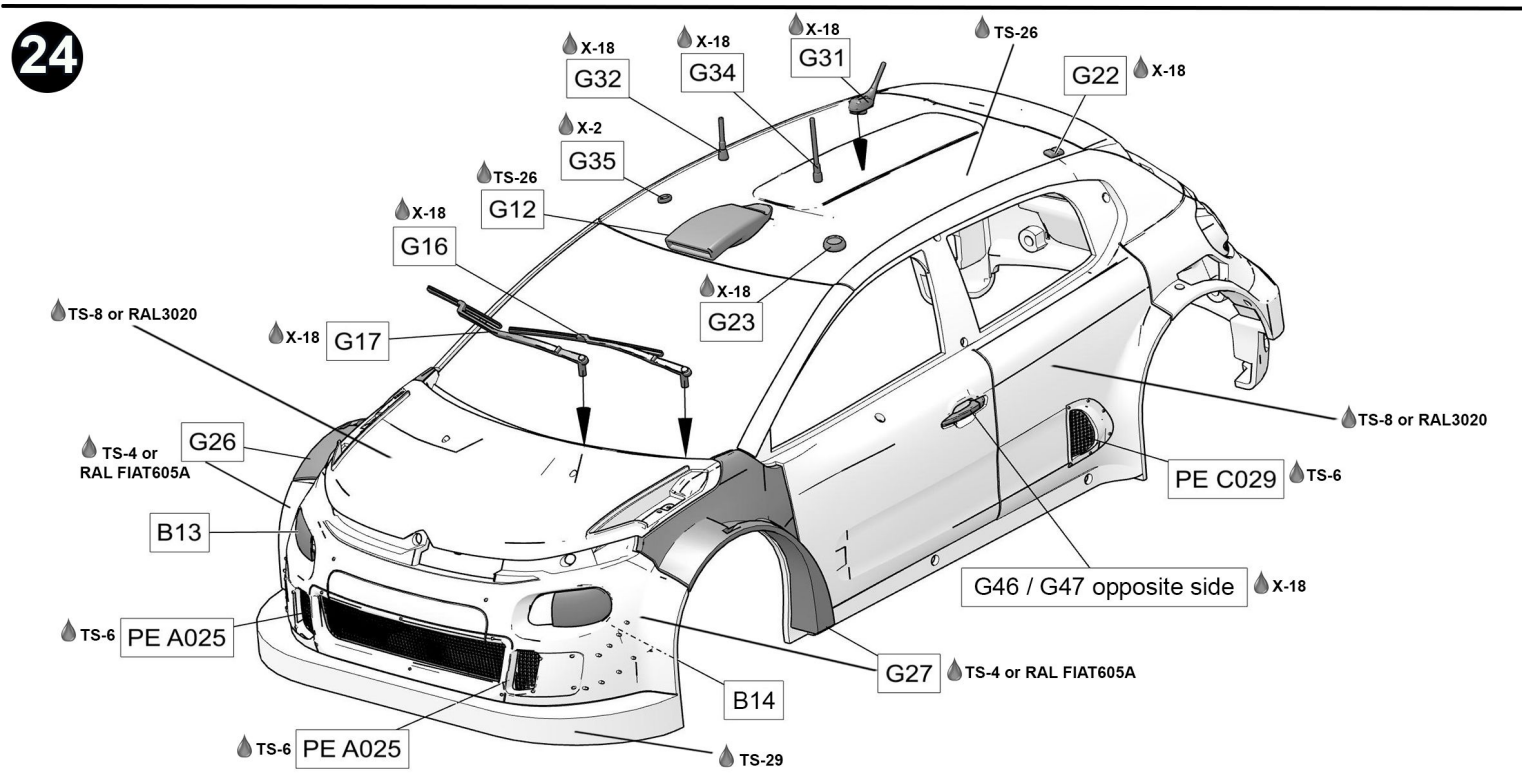
X-18
G32
X-18
G34
X-18
G31
TS-26
G22
X-18
X-2
G35
TS-26
G12
X-18
G16
X-18
G23
TS-8 or RAL3020
X-18
G17
TS-8 or RAL3020
TS-4 or
RAL FIAT605A
G26
PE C029
TS-6
B13
G46 / G47 opposite side
X-18
TS-6
PE A025
G27
TS-4 or RAL FIAT605A
B14
TS-6
PE A025
TS-29

## 25

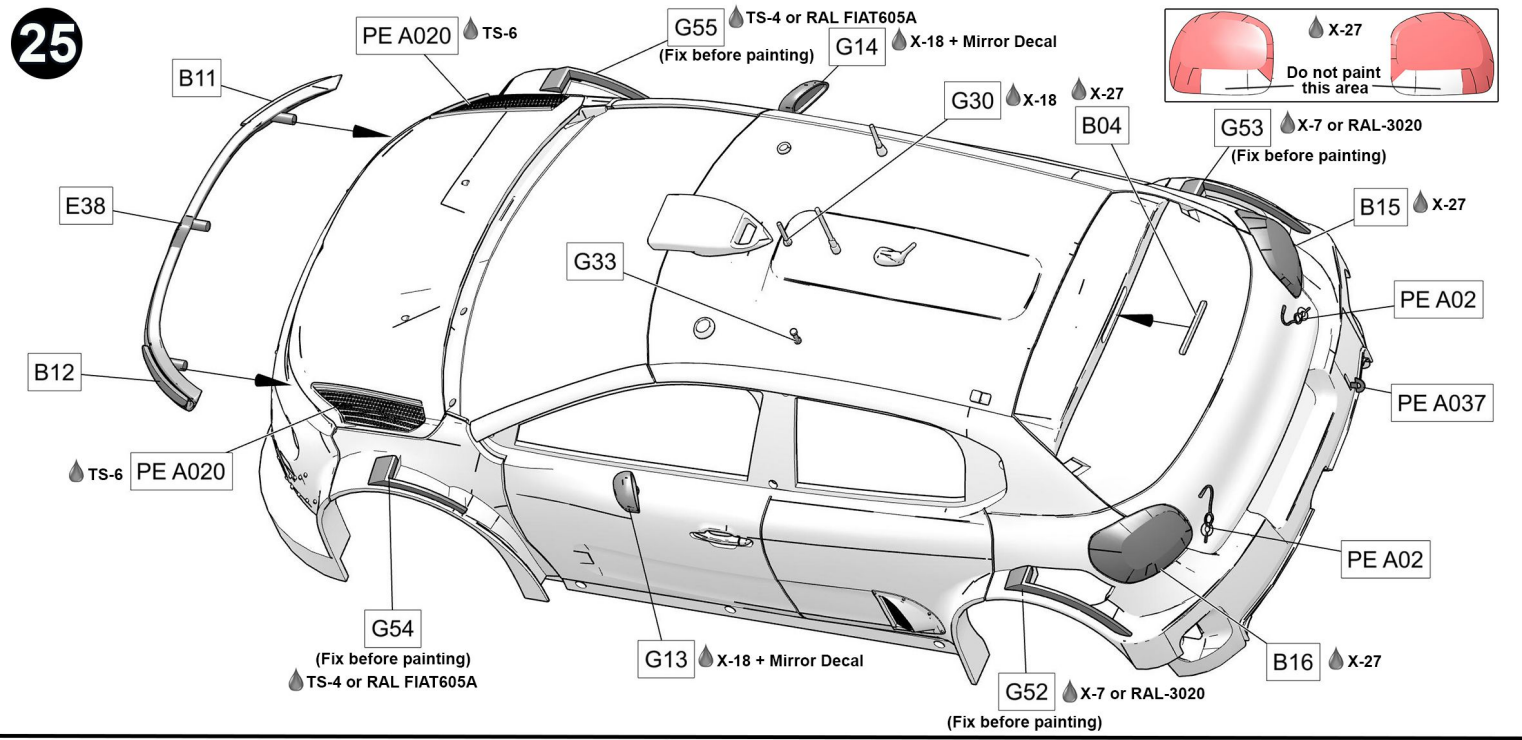
PE A020
TS-6
G55
TS-4 or RAL FIAT605A
(Fix before painting)
G14
X-18 + Mirror Decal
X-27
Do not paint this area
B11
G30
X-18
X-27
B04
G53
X-7 or RAL-3020
(Fix before painting)
E38
B15
X-27
G33
PE A02
B12
PE A037
TS-6
PE A020
PE A02
G54
(Fix before painting)
TS-4 or RAL FIAT605A
G13
X-18 + Mirror Decal
B16
X-27
G52
X-7 or RAL-3020
(Fix before painting)

## 26

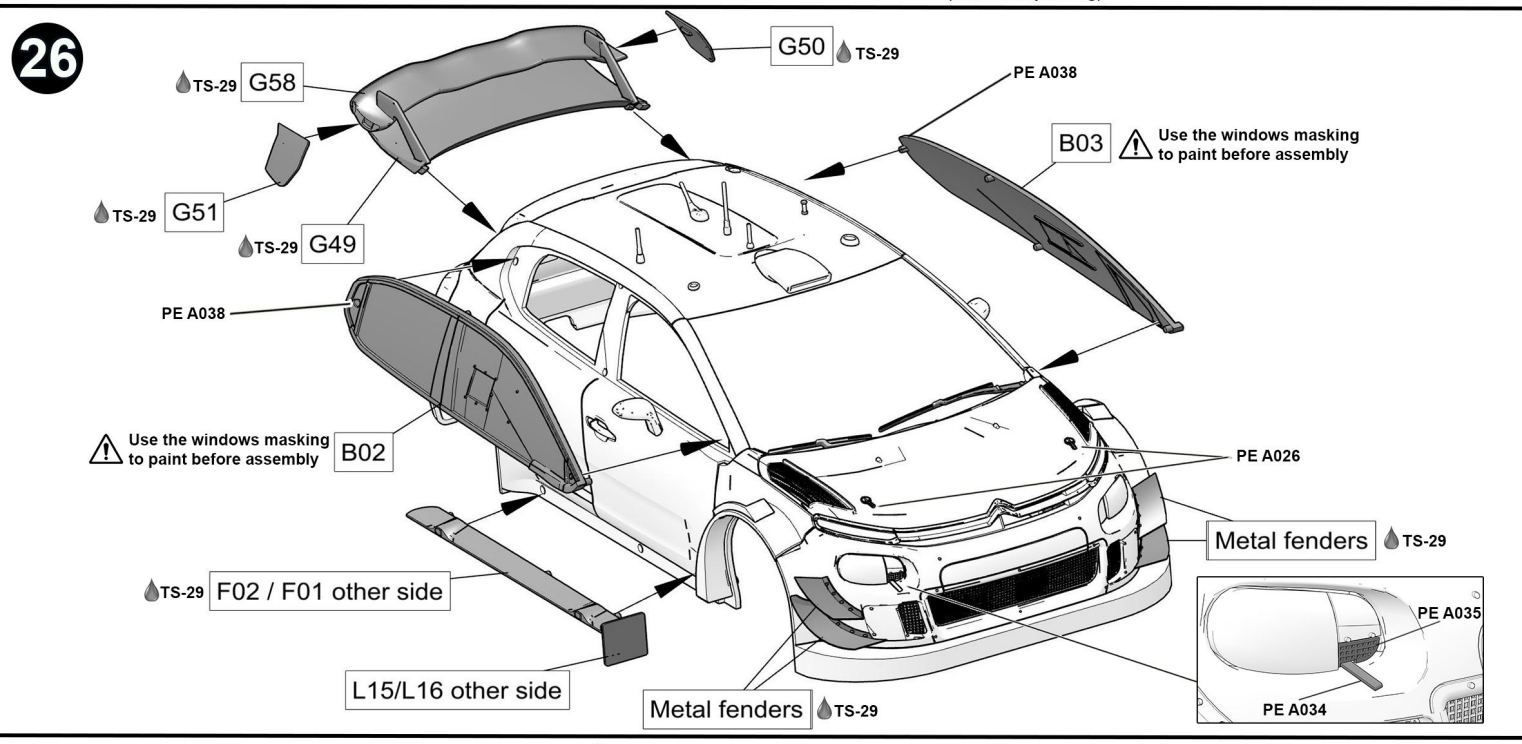
G50
TS-29
TS-29
G58
PE A038
B03
Use the windows masking to paint before assembly
TS-29
G51
TS-29
G49
PE A038
Use the windows masking to paint before assembly
B02
PE A026
Metal fenders
TS-29
TS-29
F02 / F01 other side
PE A035
PE A034
L15/L16 other side
Metal fenders
TS-29

## 27

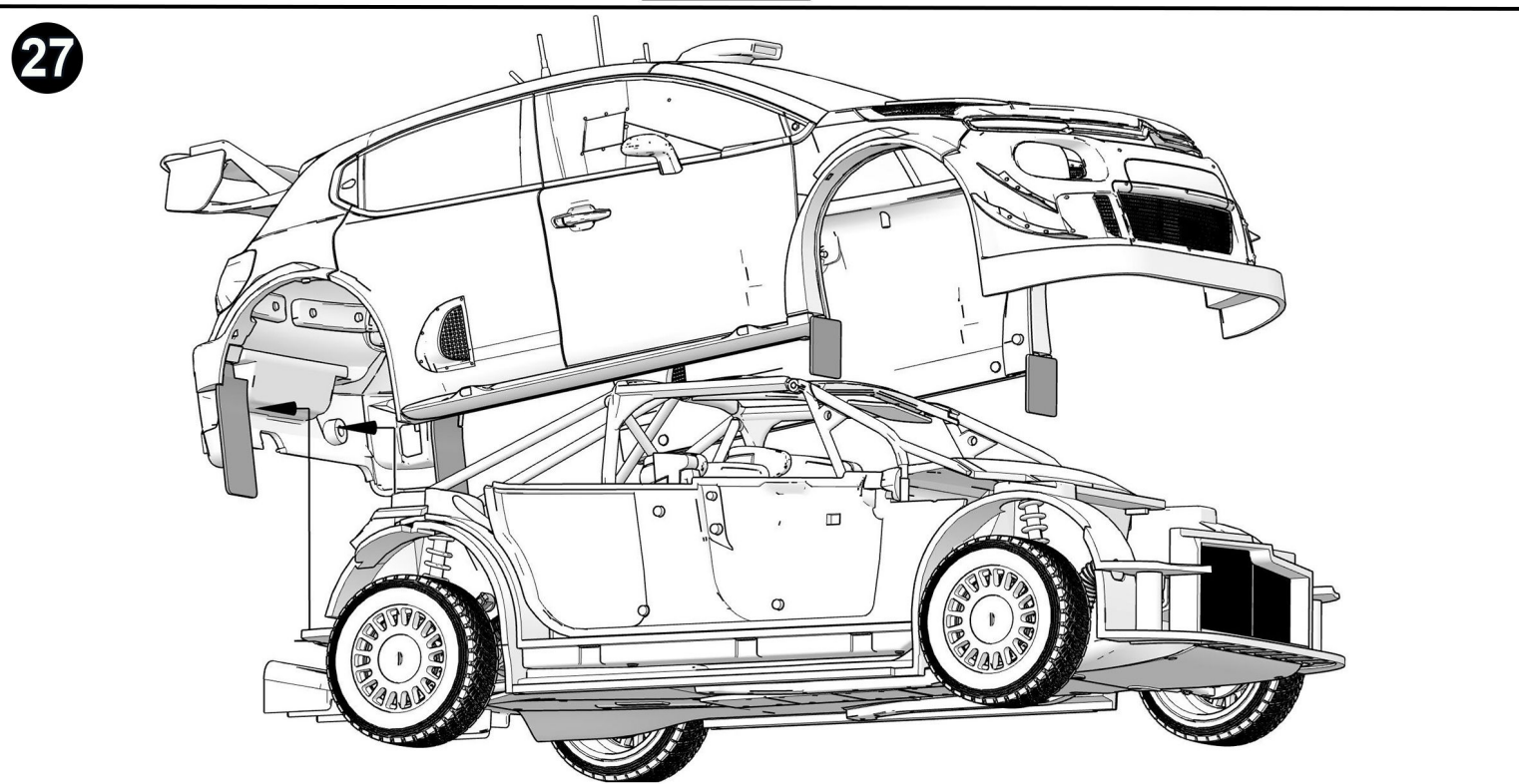

# OPTIONAL PARTS

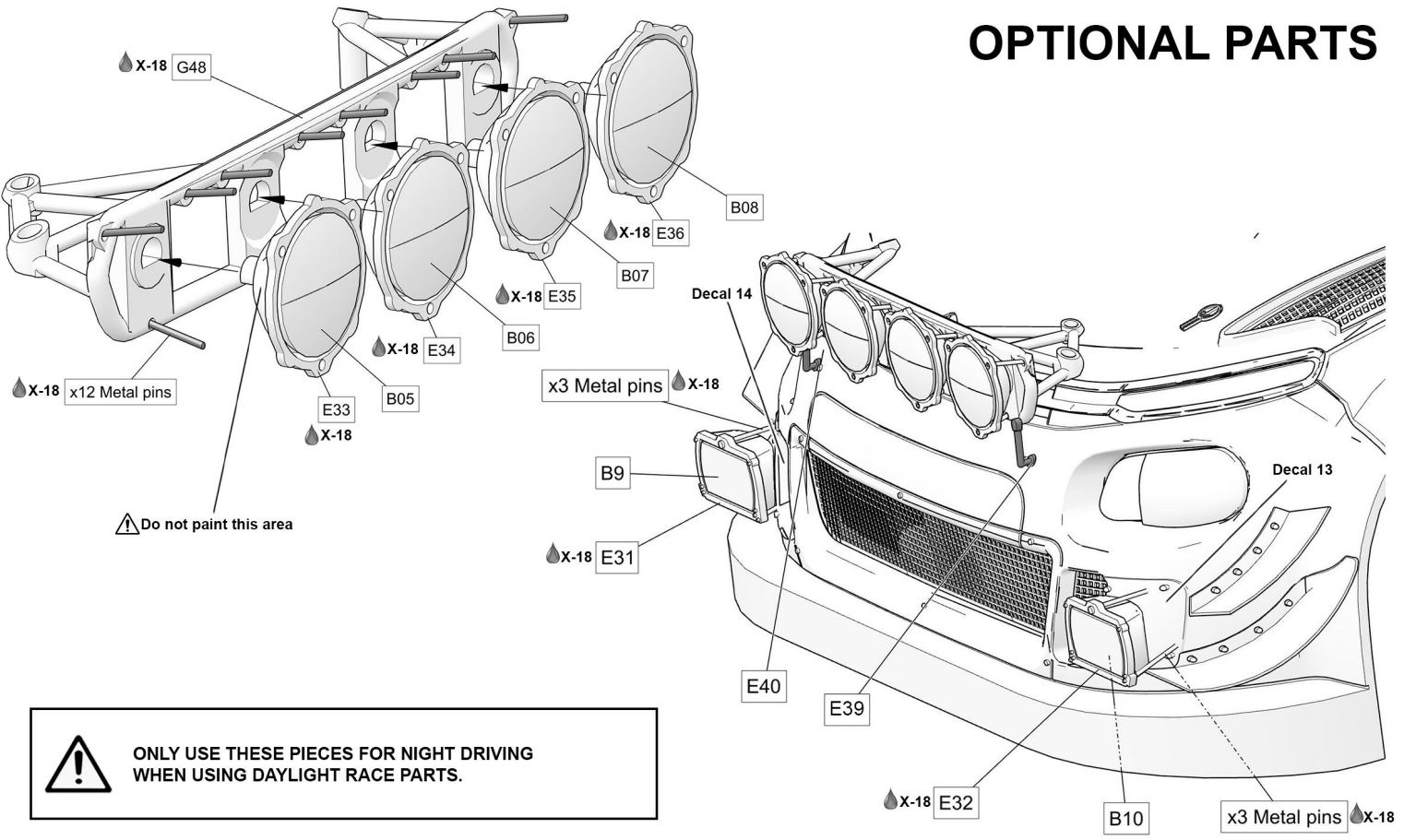


**ONLY USE THESE PIECES FOR NIGHT DRIVING WHEN USING DAYLIGHT RACE PARTS.**

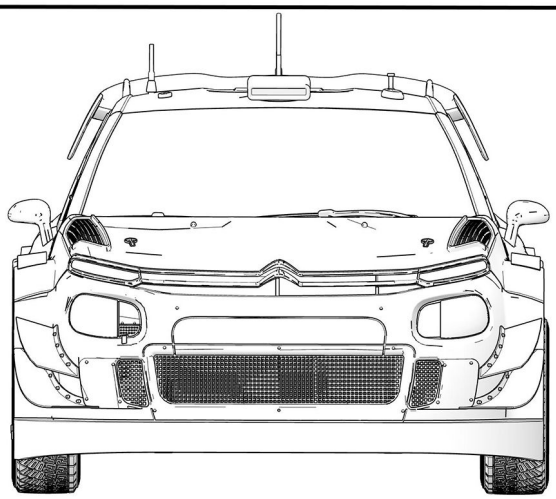

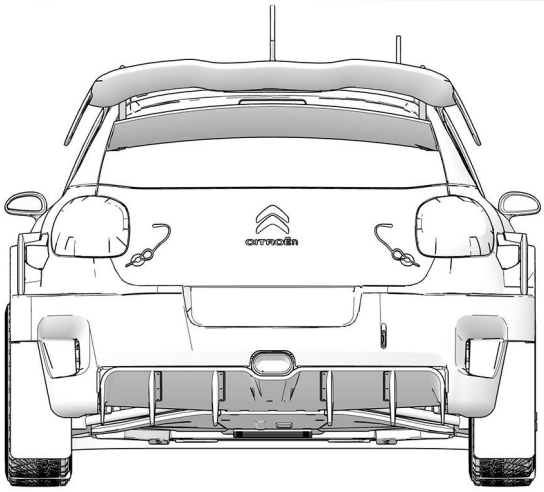

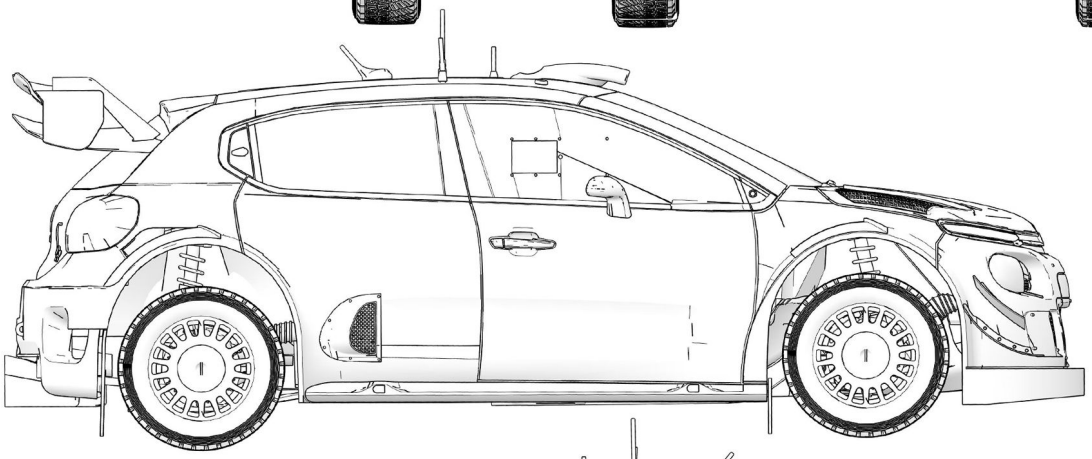

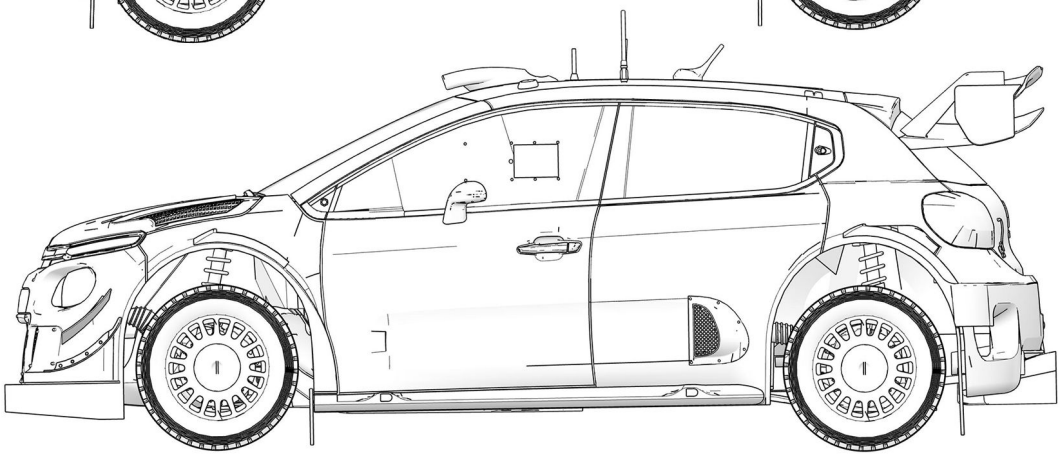

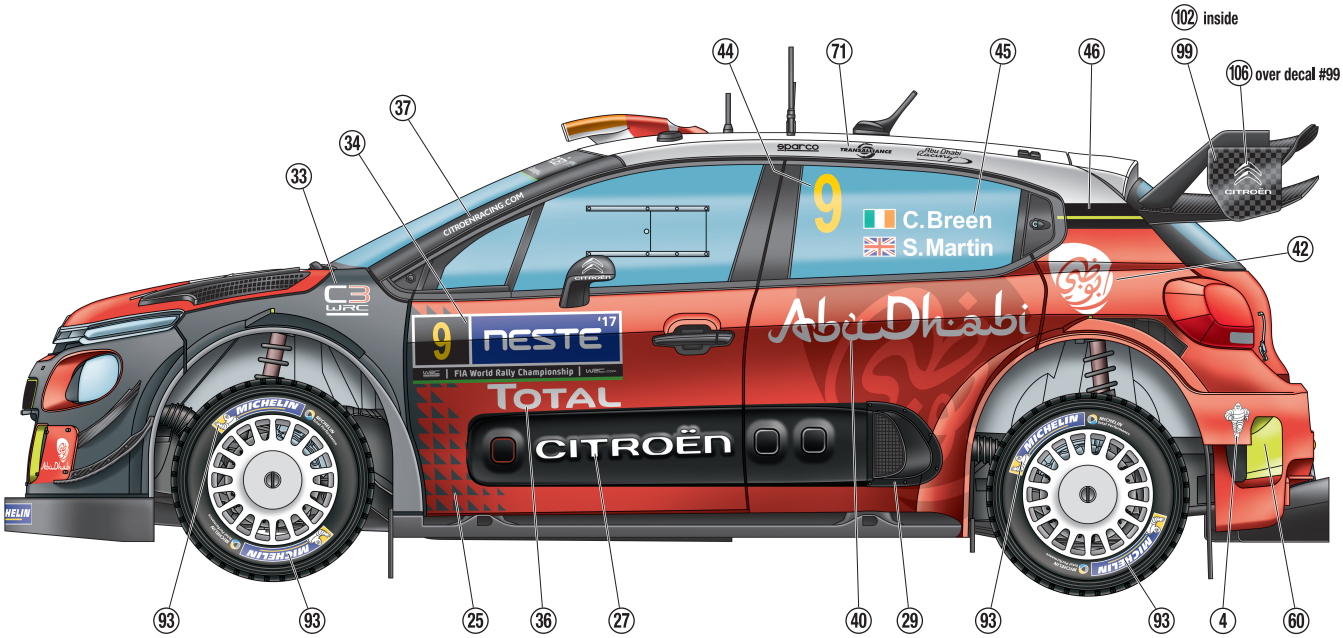
102 inside
106 over decal #99
44
71
45
46
99
37
34
33
42
9
C.Breen
S.Martin
CITROENRACING.COM
C3 WRC
NESTE '17
FIA World Rally Championship
TOTAL
CITROËN
Abu Dhabi
MICHELIN
93
93
25
36
27
40
29
93
93
4
60

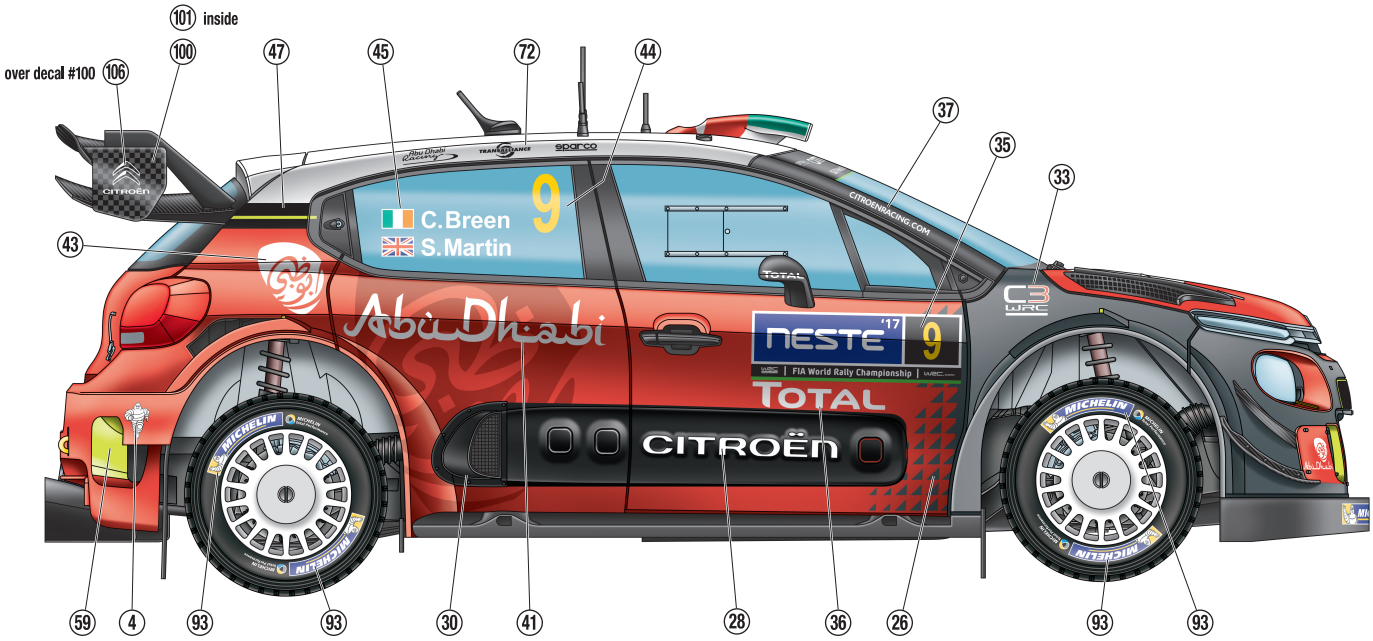
101 inside
over decal #100 106
100
47
45
72
44
37
35
33
43
9
C.Breen
S.Martin
CITROENRACING.COM
C3 WRC
NESTE '17
FIA World Rally Championship
TOTAL
CITROËN
Abu Dhabi
MICHELIN
59
4
93
93
30
41
28
36
26
93
93

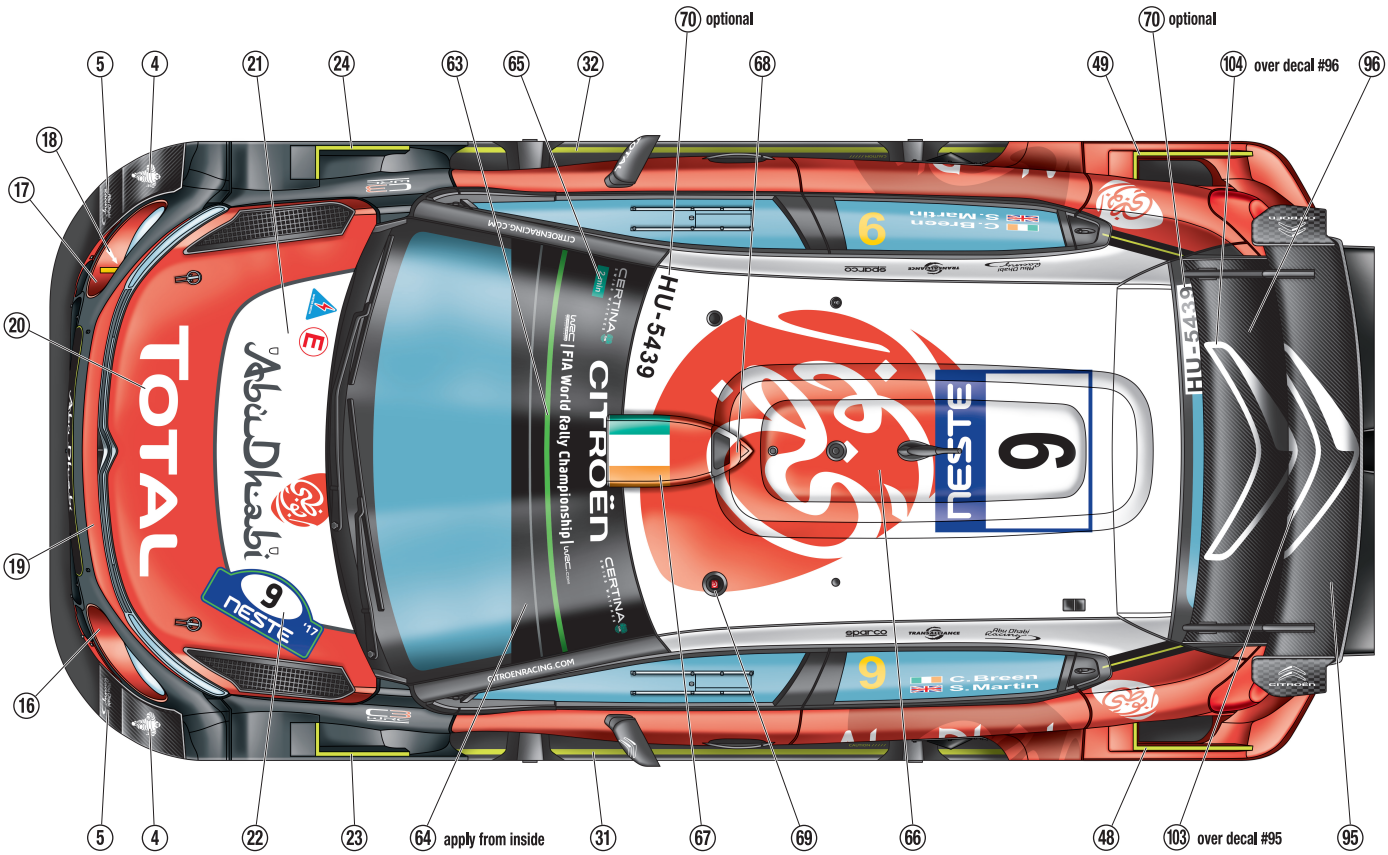
70 optional
70 optional
5
4
21
24
63
65
32
68
49
104 over decal #96
96
18
17
20
19
16
5
4
22
23
64 apply from inside
31
67
69
66
48
103 over decal #95
95
TOTAL
AbuDhabi
NESTE
9
CITROËN
FIA World Rally Championship
HU-5439
C. Breen
S. Martin
CITROENRACING.COM

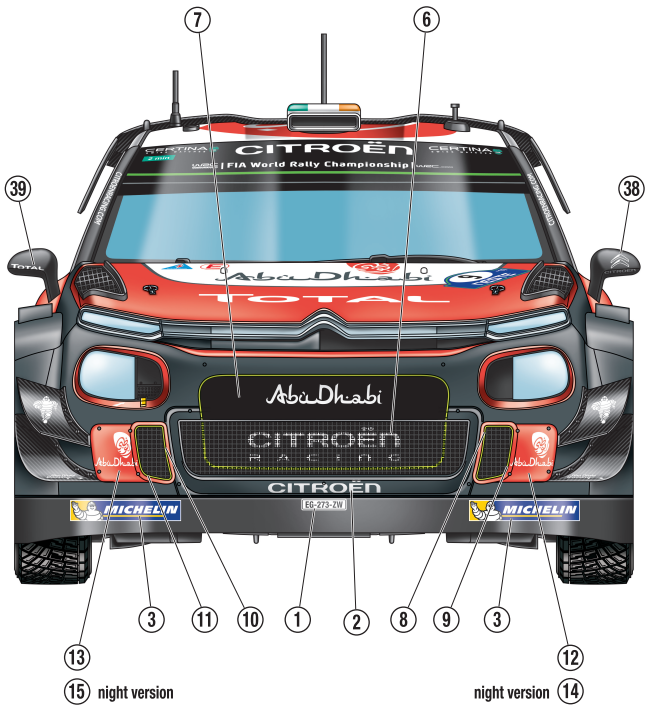
7
6
39
38
CITROËN
FIA World Rally Championship
TOTAL
AbuDhabi
CITROËN
RACING
MICHELIN
EG-273-ZW
3
11
10
1
2
8
9
3
13
12
15 night version
night version 14

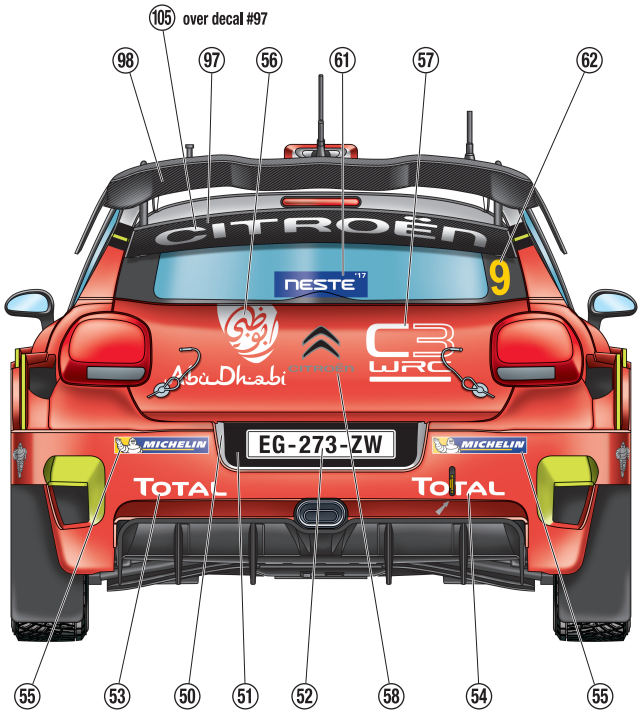
105 over decal #97
98
97
56
61
57
62
CITROËN
NESTE
9
AbuDhabi
WRC
MICHELIN
EG-273-ZW
TOTAL
55
53
50
51
52
58
54
55